| | | |
|---|---|---|
| **Last Modified:** 03-12-2013 | 6.4 F | **Doc ID:** NM1000000004HD0 |
| **Model Year:** 2013 | **Model:** RAV4 | **Prod Date Range:** [12/2012 - ] |
| **Title:** 2AR-FE ENGINE MECHANICAL: ENGINE UNIT: CONNECTING ROD AND CONNECTING ROD BEARING; 2013 MY RAV4 [12/2012 - ] | | |

# CONNECTING ROD AND CONNECTING ROD BEARING

## 1. CONSTRUCTION

(a) The connecting rods and caps are made of micro-alloyed steel.

(b) Plastic region tightening bolts are used on the connecting rod.

(c) The connecting rod bearings are reduced in width to reduce friction.

(d) The lining surface of the connecting rod bearing has been micro-grooved to achieve an optimal amount of oil clearance. As a result, cold-engine cranking performance has been improved and engine vibrations have been reduced.

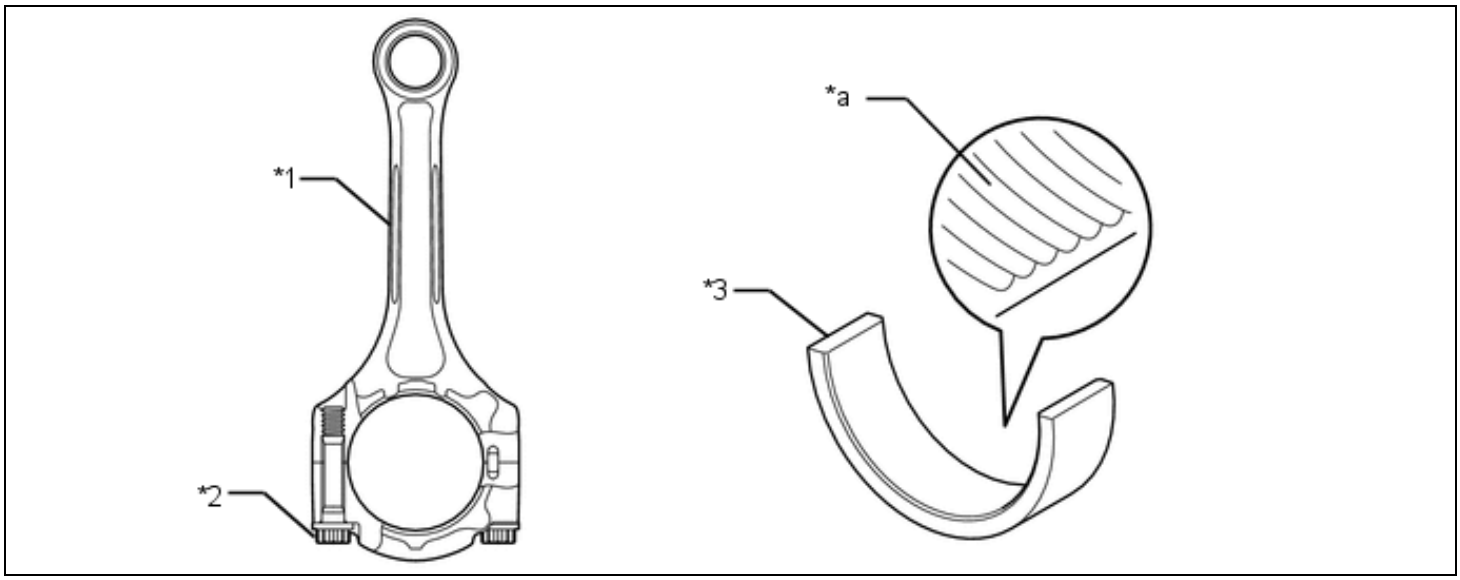


| | | | |
|---|---|---|---|
| *1 | Connecting Rod | *2 | Plastic Region Tightening Bolt |
| *3 | Connecting Rod Bearing | - | - |
| *a | Micro-grooved | - | - |