| | | |
|---|---|---|
| **Last Modified:** 03-12-2013 | 6.4 F | **Doc ID:** NM1000000004IEA |
| **Model Year:** 2013 | **Model:** RAV4 | **Prod Date Range:** [12/2012 - ] |
| **Title:** PARK ASSIST / MONITORING: MONITOR SYSTEM: TELEVISION CAMERA; 2013 MY RAV4 [12/2012 - ] | | |

# TELEVISION CAMERA

## 1. CONSTRUCTION

(a) Rear Television Camera Assembly

(1) The rear television camera assembly consists of a wide-angle lens and a Complementary Metal Oxide Semiconductor (CMOS).

(2) An image captured by the rear view television camera lens is converted into electrical signals in accordance with the light intensity by using the CMOS image element, and the signals are then output to the radio and display receiver assembly.
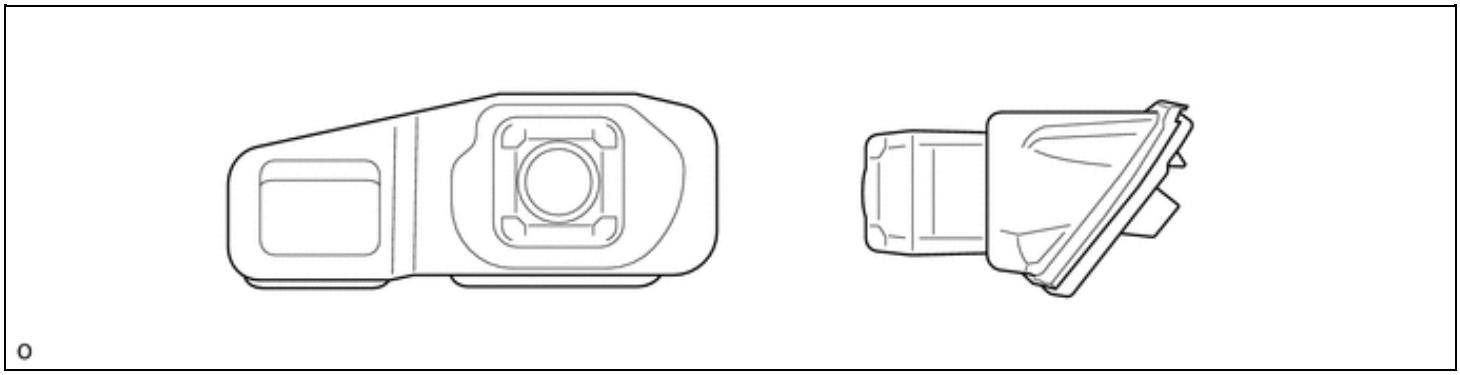
(3) The image output from the rear television camera assembly is reversed to match the rear view seen from the inside rear view mirror. Therefore, the view actually seen is displayed on the screen in the horizontal reverse.