| | | |
|---|---|---|
| **Last Modified:** 03-12-2013 | 6.4 F | **Doc ID:** NM1000000004HCQ |
| **Model Year:** 2013 | **Model:** RAV4 | **Prod Date Range:** [12/2012 - ] |
| **Title:** 2AR-FE ENGINE MECHANICAL: ENGINE UNIT: CYLINDER HEAD GASKET; 2013 MY RAV4 [12/2012 - ] | | |

# CYLINDER HEAD GASKET

## 1. CONSTRUCTION

(a) A triple-layer metal type cylinder head gasket is used.
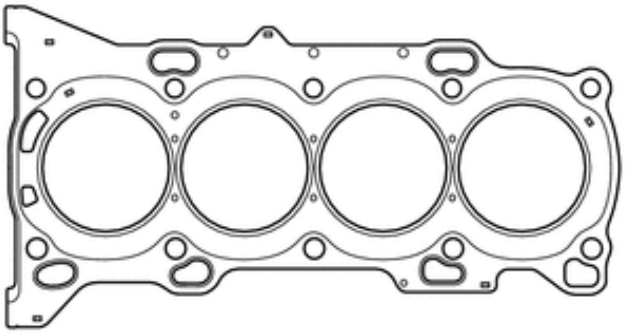
(b) The surface of the cylinder head gasket is coated with fluoro rubber to ensure a high level of reliability.