| | | |
|---|---|---|
| **Last Modified:** 03-12-2013 | 6.4 F | **Doc ID:** NM1000000004HC8 |
| **Model Year:** 2013 | **Model:** RAV4 | **Prod Date Range:** [12/2012 - ] |
| **Title:** 2AR-FE ENGINE CONTROL: SFI SYSTEM: INTAKE MASS AIR FLOW METER; 2013 MY RAV4 [12/2012 - ] | | |

# INTAKE MASS AIR FLOW METER

## 1. CONSTRUCTION

(a) The compact and lightweight intake mass air flow meter sub-assembly, which is a plug-in type, allows a portion of the intake air to flow through the detection area. By directly measuring the mass and the flow rate of the intake air, detection precision is ensured and intake air resistance is reduced.

(b) This intake mass air flow meter sub-assembly has a built-in intake air temperature sensor.

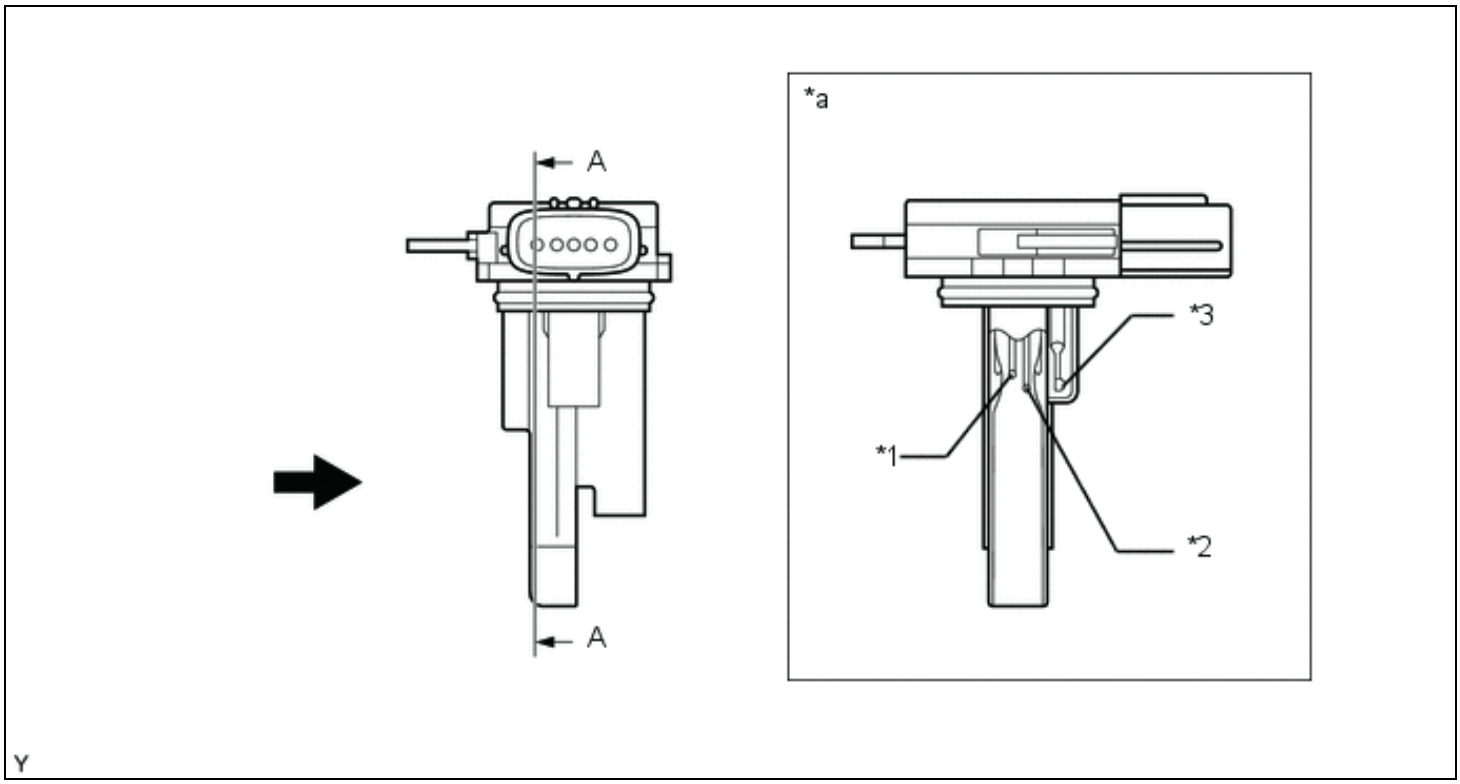


| | | | |
|---|---|---|---|
| *1 | Hot-wire Element | *2 | Temperature Sensing Element |
| *3 | Intake Air Temperature Sensor | - | - |
| *a | A - A Cross Section | - | - |
| ➡ | Air Flow | - | - |