| | | |
|---|---|---|
| **Last Modified:** 03-12-2013 | 6.4 F | **Doc ID:** NM1000000005PTZ |
| **Model Year:** 2013 | **Model:** RAV4 | **Prod Date Range:** [12/2012 - ] |
| **Title:** FRONT SUSPENSION: FRONT SUSPENSION SYSTEM: STABILIZER BAR; 2013 MY RAV4 [12/2012 - ] | | |

# STABILIZER BAR

## 1. CONSTRUCTION

(a) The front stabilizer bar is hollow, reducing the weight.

(b) A ball joint is used at both ends of the front stabilizer link assembly. As a result, the ball joint performs effectively even for slight rolling and maintains a stable roll feeling.

(c) The surface of the front stabilizer bar bush installed in the front suspension cross member sub-assembly has a saddle shape. This construction, which is embedded into the cross section of the front suspension cross member sub-assembly, ensures excellent support rigidity.

(d) The front stabilizer bar bush is provided with a dust lip to prevent sand from entering.

(e) The front stabilizer bar bush has a dual construction using the following materials: an outer layer made of high rigidity ordinary rubber and an inner layer made of low rigidity self-lubricating rubber. Thus, high rolling rigidity and easy installation are achieved. To reduce friction, a fluorine coating is provided in the bore diameter of the front stabilizer bar bush.

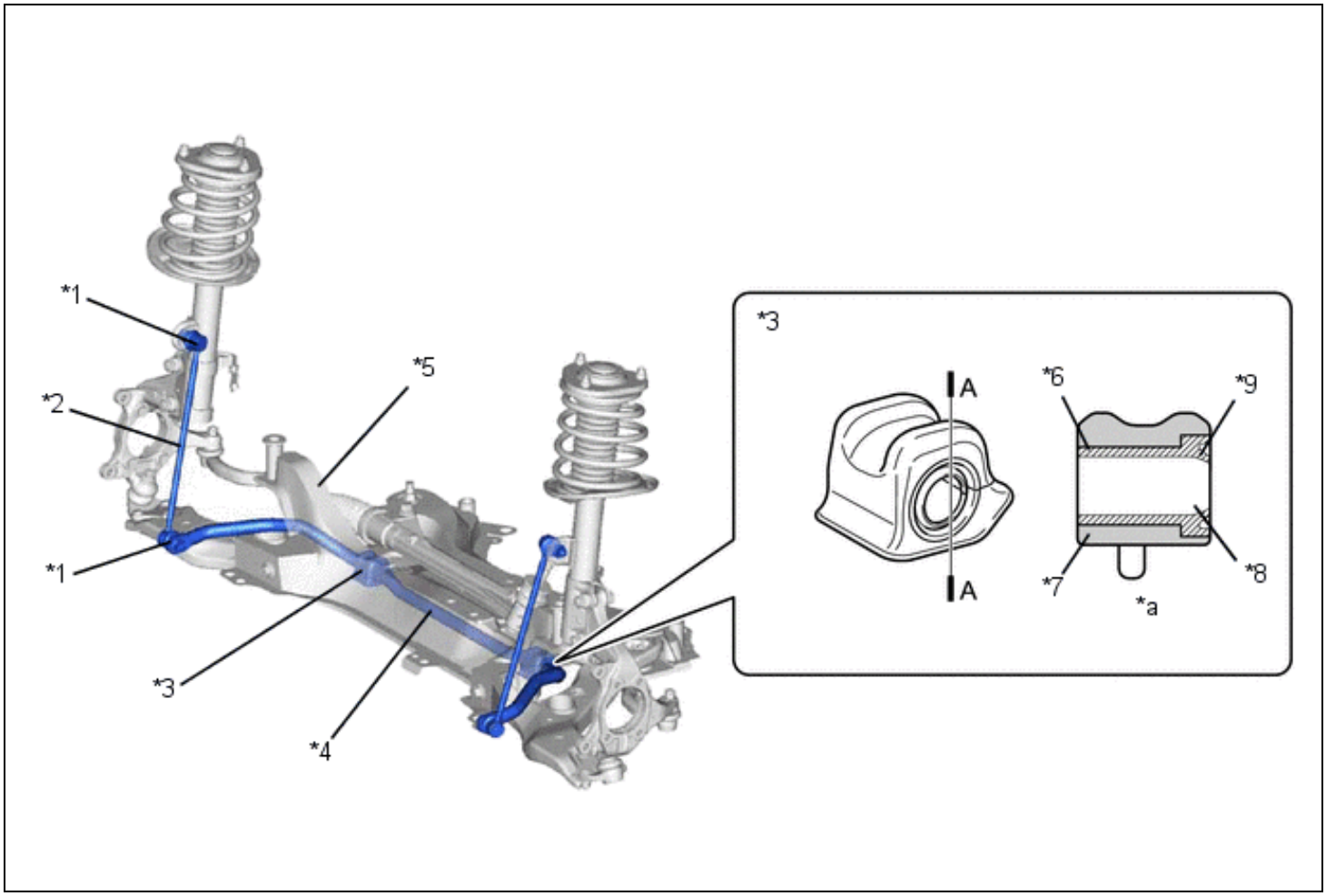


| | | | |
|---|---|---|---|
| *1 | Ball Joint | *2 | Front Stabilizer Link Assembly |
| *3 | Front Stabilizer Bar Bush | *4 | Front Stabilizer Bar |
| | | | |

| | | | |
|---|---|---|---|
| *5 | Front Suspension Cross Member Sub-assembly | *6 | Inner Layer (Low Rigidity Self-lubricating Rubber) |
| *7 | Outer Layer (High Rigidity Ordinary Rubber) | *8 | Fluorine Coating |
| *9 | Dust Lip | - | - |
| *a | A - A Cross Section | - | - |