| | | |
|---|---|---|
| **Last Modified:** 03-12-2013 | 6.4 F | **Doc ID:** NM1000000004IDS |
| **Model Year:** 2013 | **Model:** RAV4 | **Prod Date Range:** [12/2012 - ] |
| **Title:** AUDIO / VIDEO: AUDIO AND VISUAL SYSTEM: PARTS LOCATION; 2013 MY RAV4 [12/2012 - ] | | |

# PARTS LOCATION

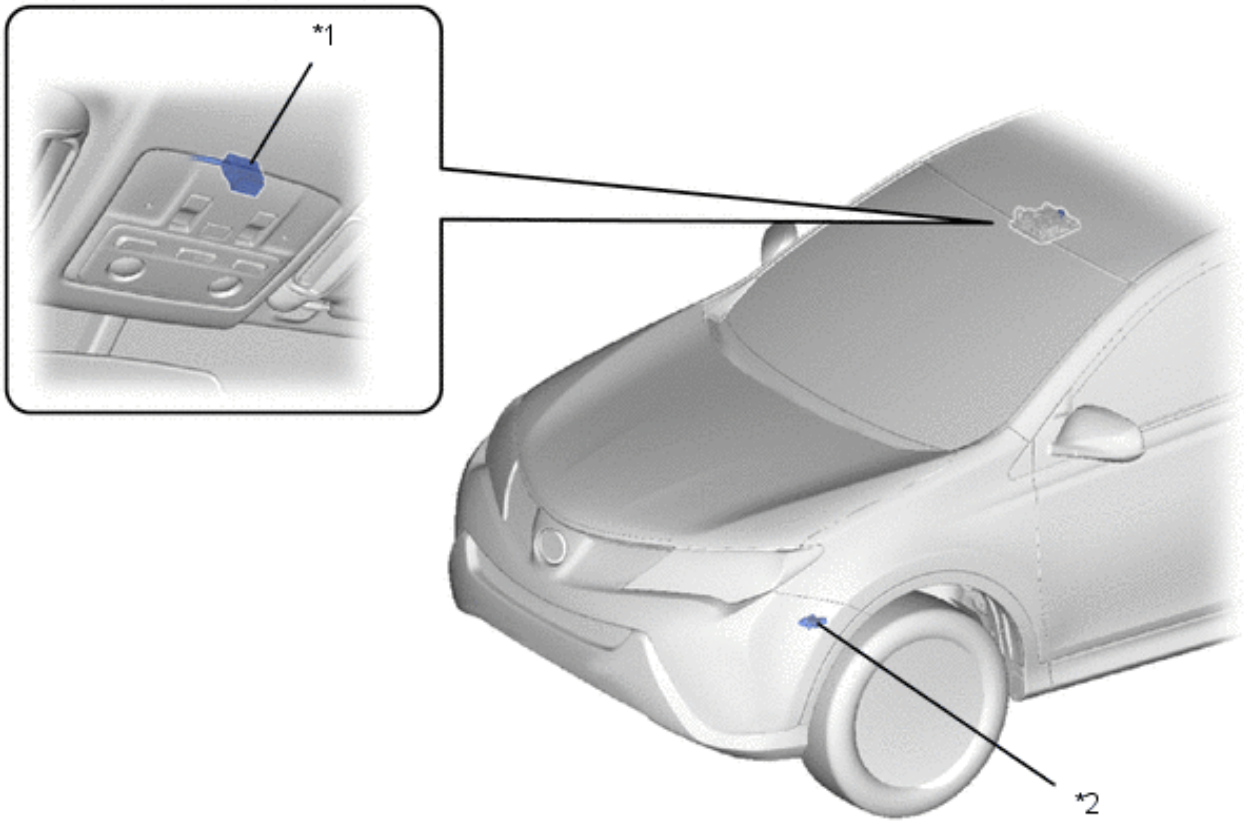


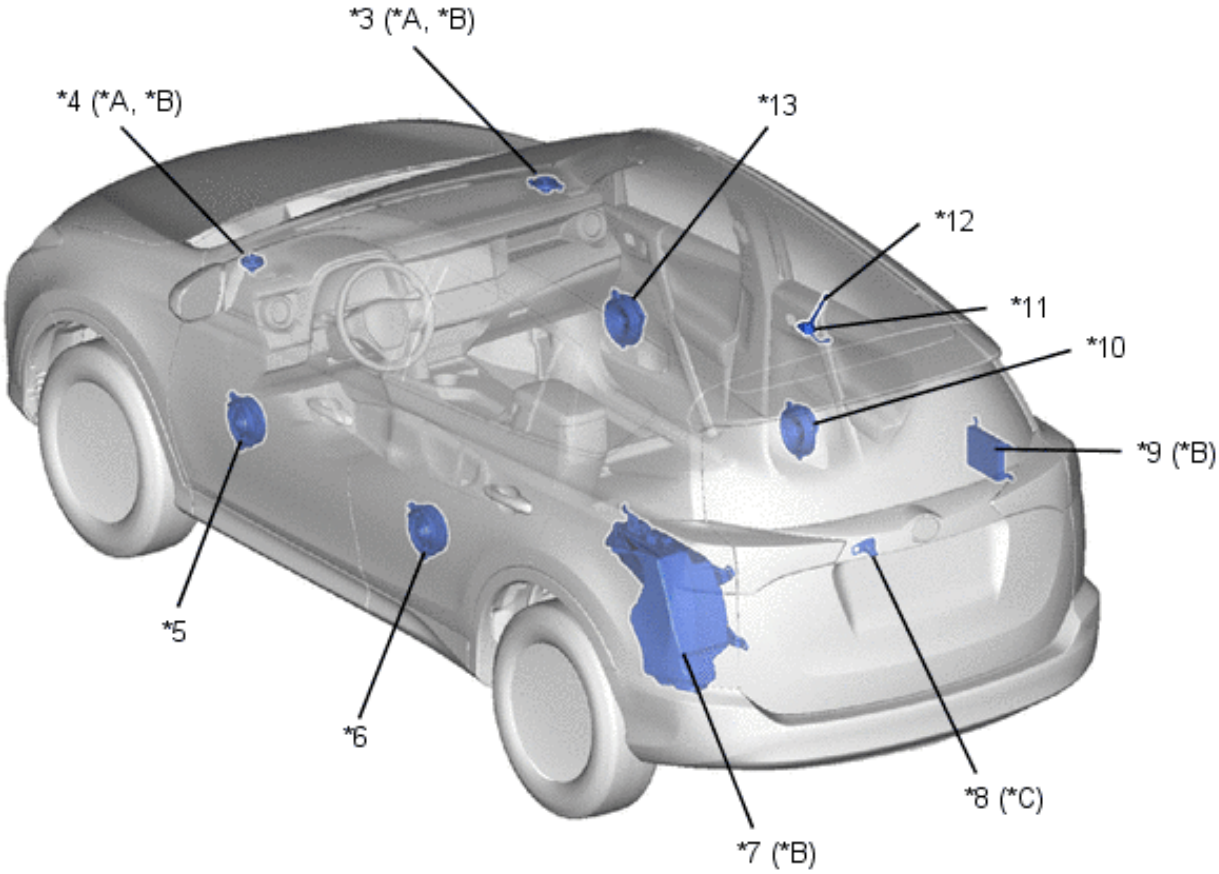


o

| | | | |
|---|---|---|---|
| *A | Models with 6-speaker System | *B | Models with 11-speaker System |
| *C | Models with Monitor System | - | - |
| *1 | Telephone Microphone Assembly | *2 | Park/Neutral Position Switch Assembly |

| | | | |
|---|---|---|---|
| *3 | Front No. 2 Speaker Assembly RH | *4 | Front No. 2 Speaker Assembly LH |
| *5 | Front No. 1 Speaker Assembly LH | *6 | Rear Speaker Assembly LH |
| *7 | Stereo Component Speaker Assembly | *8 | Rear Television Camera Assembly |
| *9 | Stereo Component Amplifier Assembly | *10 | Rear Speaker Assembly RH |
| *11 | Amplifier Antenna Assembly | *12 | Roof Antenna Pole Sub-assembly |
| *13 | Front No. 1 Speaker Assembly RH | - | - |

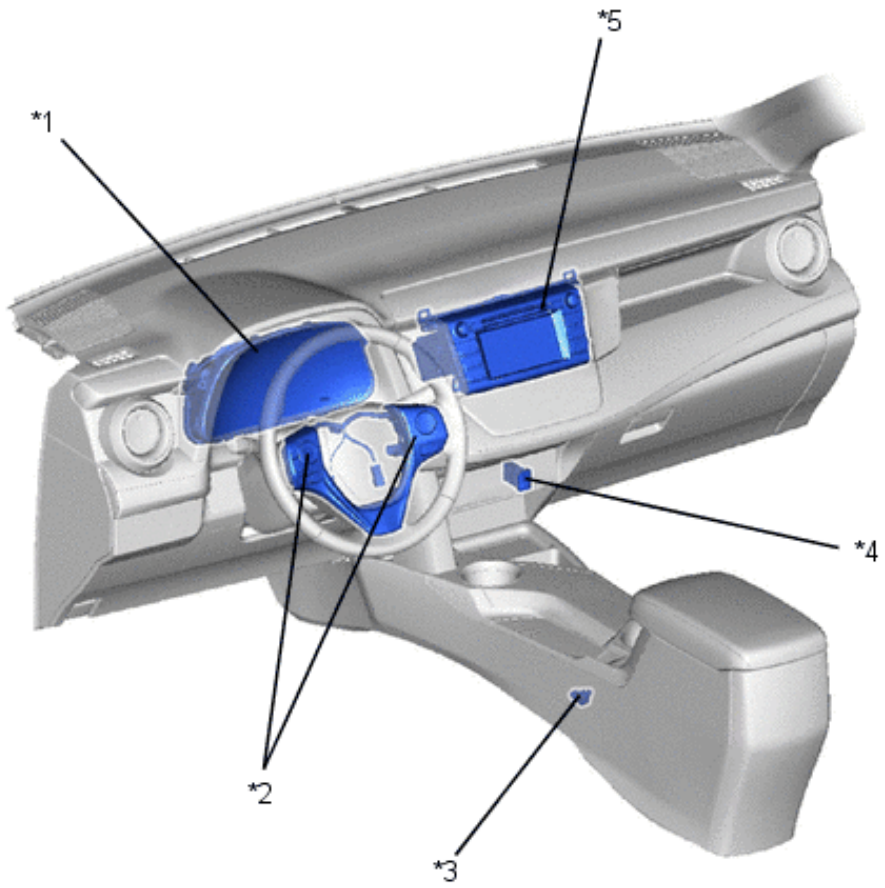


o

| | | | |
|---|---|---|---|
| *1 | Combination Meter Assembly | *2 | Steering Pad Switch Assembly |
| *3 | Parking Brake Switch Assembly | *4 | No. 1 Stereo Jack Adapter Assembly |
| *5 | Audio Head Unit | - | - |