| | | |
|---|---|---|
| **Last Modified:** 03-12-2013 | 6.4 F | **Doc ID:** NM1000000004IDY |
| **Model Year:** 2013 | **Model:** RAV4 | **Prod Date Range:** [12/2012 - ] |
| **Title:** PARK ASSIST / MONITORING: INTUITIVE PARKING ASSIST SYSTEM: ULTRASONIC SENSOR; 2013 MY RAV4 [12/2012 - ] | | |

# ULTRASONIC SENSOR

## 1. CONSTRUCTION

(a) The No. 1 ultrasonic sensor consists of a circuit portion and a microphone that transmits and receives ultrasonic waves.

(b) The circuit portion is filled with urethane to prevent water from entering.

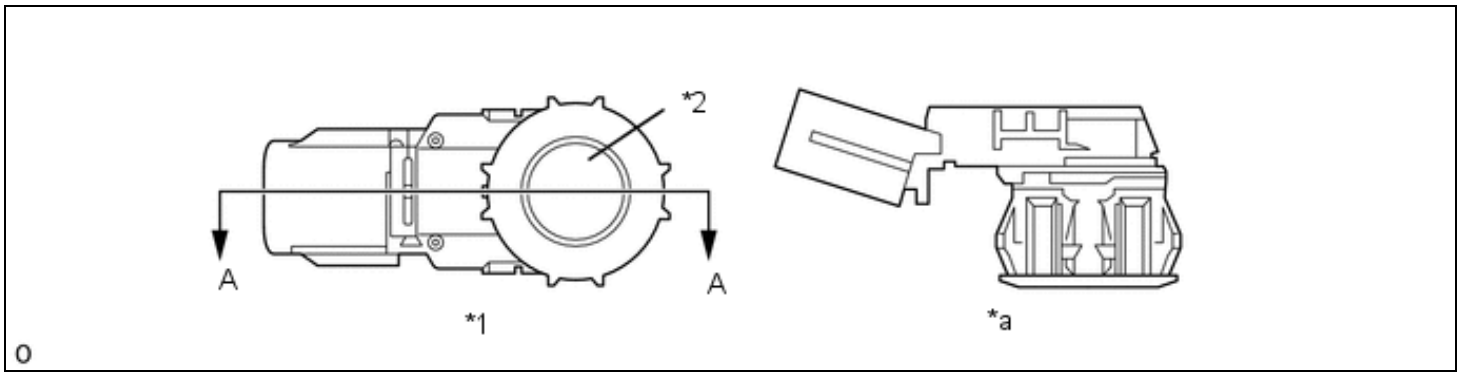


| | | | |
|---|---|---|---|
| *1 | No. 1 Ultrasonic Sensor | *2 | Microphone |
| *a | A - A Cross Section | - | - |