| | | |
|---|---|---|
| **Last Modified:** 03-12-2013 | 6.4 F | **Doc ID:** NM1000000004IDQ |
| **Model Year:** 2013 | **Model:** RAV4 | **Prod Date Range:** [12/2012 - ] |
| **Title:** AUDIO / VIDEO: AUDIO AND VISUAL SYSTEM: GENERAL; 2013 MY RAV4 [12/2012 - ] | | |

# GENERAL

## 1. OUTLINE

(a) Audio System

(1) The audio systems shown below are available:

| AUDIO SYSTEM | AUDIO HEAD UNIT | SPEAKER |
|---|---|---|
| 4-speaker Sound System | Radio Receiver Assembly | 4 Speakers |
| Display Audio System | Radio and Display Receiver Assembly | 6 Speakers |
| | | 11 Speakers |

(b) Bluetooth Audio System

(1) The Bluetooth audio system enables the users to listen to the music stored in a Bluetooth-compliant portable audio device (Bluetooth audio player) through a Bluetooth connection.

(2) The Bluetooth audio system can operate a Bluetooth audio player through the audio head unit.

(c) Bluetooth Hands-free System

(1) The Bluetooth hands-free system enables drivers to place or receive phone calls using a cellular phone without releasing their hands from the steering wheel.

(2) For safety, some functions of the Bluetooth hands-free system may not be selectable while the vehicle is being driven.

| | |
|---|---|
| Bluetooth® | "Bluetooth" is a trademark owned by Bluetooth SIG, Inc. |

(d) Automatic Sound Levelizer (ASL)

(1) The Automatic Sound Levelizer (ASL) function automatically adjusts the sound volume in order to enable clear audio quality even when vehicle noise increases (as vehicle noise increases, the volume is turned up, etc.).

(2) Vehicle speed signals are received from the combination meter assembly and used for ASL control.

(e) No. 1 Stereo Jack Adapter Assembly

(1) A No. 1 stereo jack adapter assembly is used by the audio system as an input terminal for portable audio devices.

(2) A USB port is provided that enables operation of a USB memory device, portable audio player (USB type), iPod or iPhone.

**HINT:**

- USB, iPod and iPhone operation functions may not operate in certain conditions or with certain models.
- iPod and iPhone are trademarks of Apple Inc. that have been registered in the U.S.A. and other countries.

(f) Steering Pad Switch Assembly

(1) Steering pad switches transmits the operation signals from the switches to the audio head unit.

(g) XM Satellite Radio

(1) XM satellite radio is a service that uses the signals from 2 satellites in geostationary orbit to make it possible to capture digital radio broadcasts (XM satellite radio) from over 170 channels. XM satellite radio enables users to constantly receive their favorite programs.

(h) Hybrid Digital (HD) Radio

(1) HD radio is a radio system which uses In-Band, On-Channel transmission (IBOC), a method of broadcasting developed by

iBiquity. By widening each channel of the conventional FM/AM band, and by additionally broadcasting digital audio data, various functions have been achieved. Conventional FM/AM analog broadcasts can be received without charge

(2) Digital FM broadcasts with near-CD quality sound, and the highest quality digital AM broadcasts with a sound quality level approaching that of analog FM broadcasts can be received.

(3) Analog broadcasts are automatically switched to if the system becomes unable to receive digital broadcasts (blending function).

(4) Multiple program content is delivered from the same radio station (multi-cast).

(5) Information data for the song currently being broadcast is provided by the iPod function which allows the user to purchase songs via PC iTunes, and song information can be forwarded to the user's iPod (iPod tagging).

**HINT:**

Some HD radio services are not supported.

## 2. SPECIFICATION

(a) Audio Head Unit

| AUDIO HEAD UNIT | DESIGN | SPECIFICATION |
|---|---|---|
| Radio Receiver Assembly | 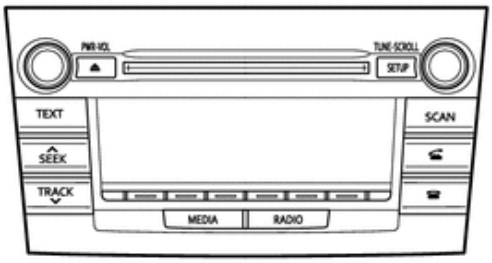 | 4-speaker Sound System:<br>• AM/FM Tuner<br>• CD Player<br>• CD-TEXT Display Function<br>• MP3 and WMA Playback Function*1<br>• Bluetooth Audio System<br>• Bluetooth Hands-free System<br>• Stereo Jack Adapter (USB, AUX Port)<br>• 4-speaker System<br>• Unit: Panasonic |
| Radio and Display Receiver Assembly | 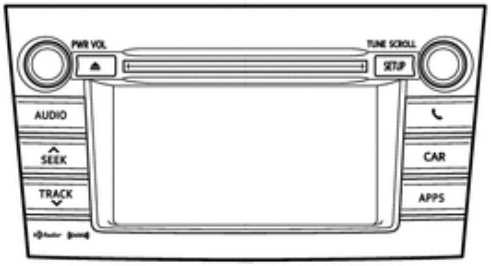 | Display Audio System:<br>• 6.1-inch EGA TFT Display<br>• AM/FM Tuner<br>• CD Player<br>• CD-TEXT Display Function<br>• MP3 and WMA Playback Function*1<br>• XM Satellite Radio*2<br>• HD Radio*2<br>• Bluetooth Audio System<br>• Bluetooth Hands-free System<br>• Stereo Jack Adapter (USB, AUX Port)<br>• iPod/iPhone Operation Function<br>• 6-speaker System<br>• Unit: Fujitsu-ten |
| | | Display Audio System:<br>• 6.1-inch EGA TFT Display |

| | | |
|---|---|---|
| | 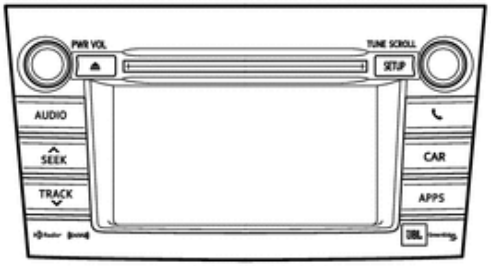 | • AM/FM Tuner<br>• CD Player<br>• CD-TEXT Display Function<br>• MP3 and WMA Playback Function*1<br>• XM Satellite Radio*2<br>• HD Radio*2<br>• Bluetooth Audio System<br>• Bluetooth Hands-free System<br>• Stereo Jack Adapter (USB, AUX Port)<br>• iPod/iPhone Operation Function<br>• 11-speaker System<br>• Unit: Fujitsu-ten |

**HINT:**

*1: MPEG Audio Layer-3 (MP3) and Windows Media Audio (WMA)

*2: Models for Contiguous United States and Canada

(b) 4-speaker System

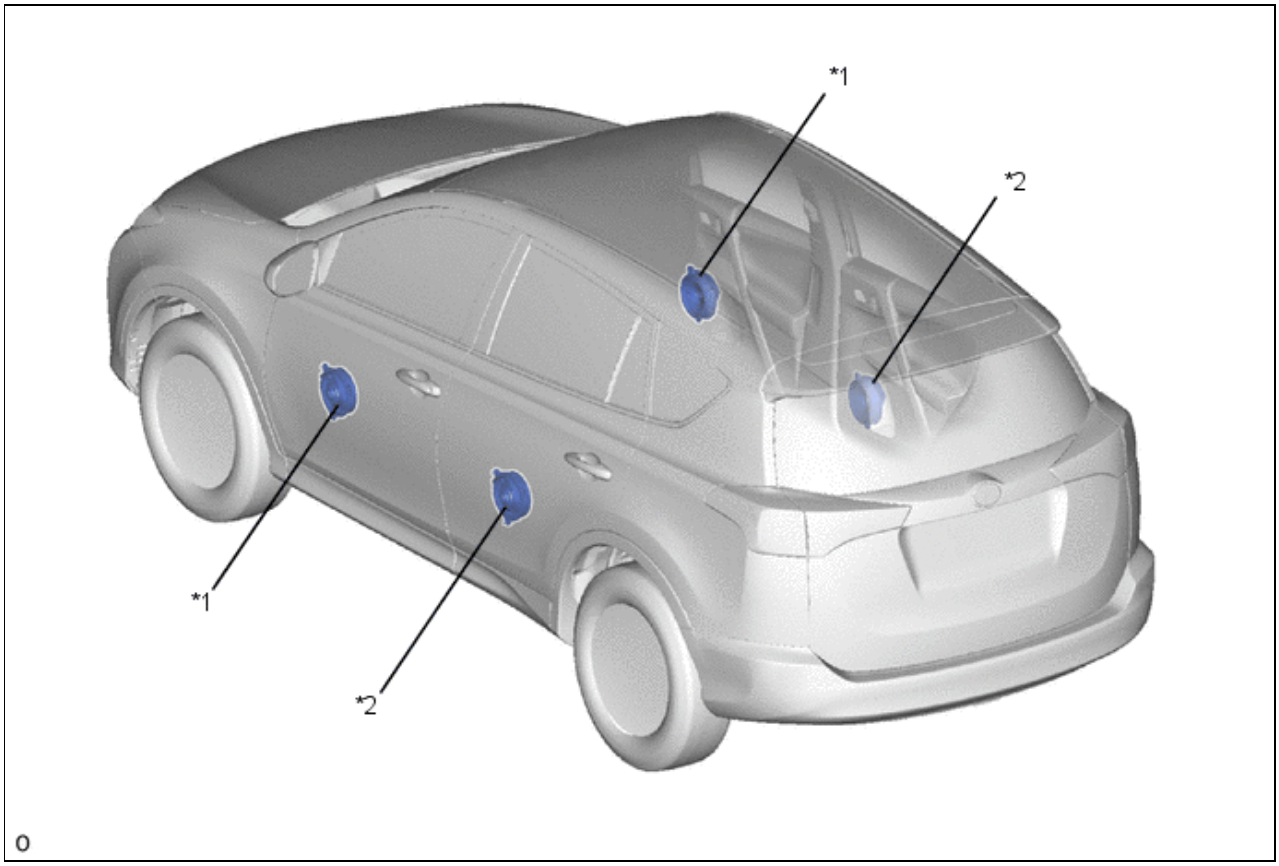


| LOCATION | SPEAKER TYPE | CALIBER | IMPEDANCE | INPUT RANGE |
|---|---|---|---|---|
| *1 | Front No. 1 Speaker Assembly (Full-range) | 160 mm (6.3 in.) | 4 Ω | 20 W |
| *2 | Rear Speaker Assembly (Full-range) | 160 mm (6.3 in.) | 4 Ω | 20 W |

(c) 6-speaker System

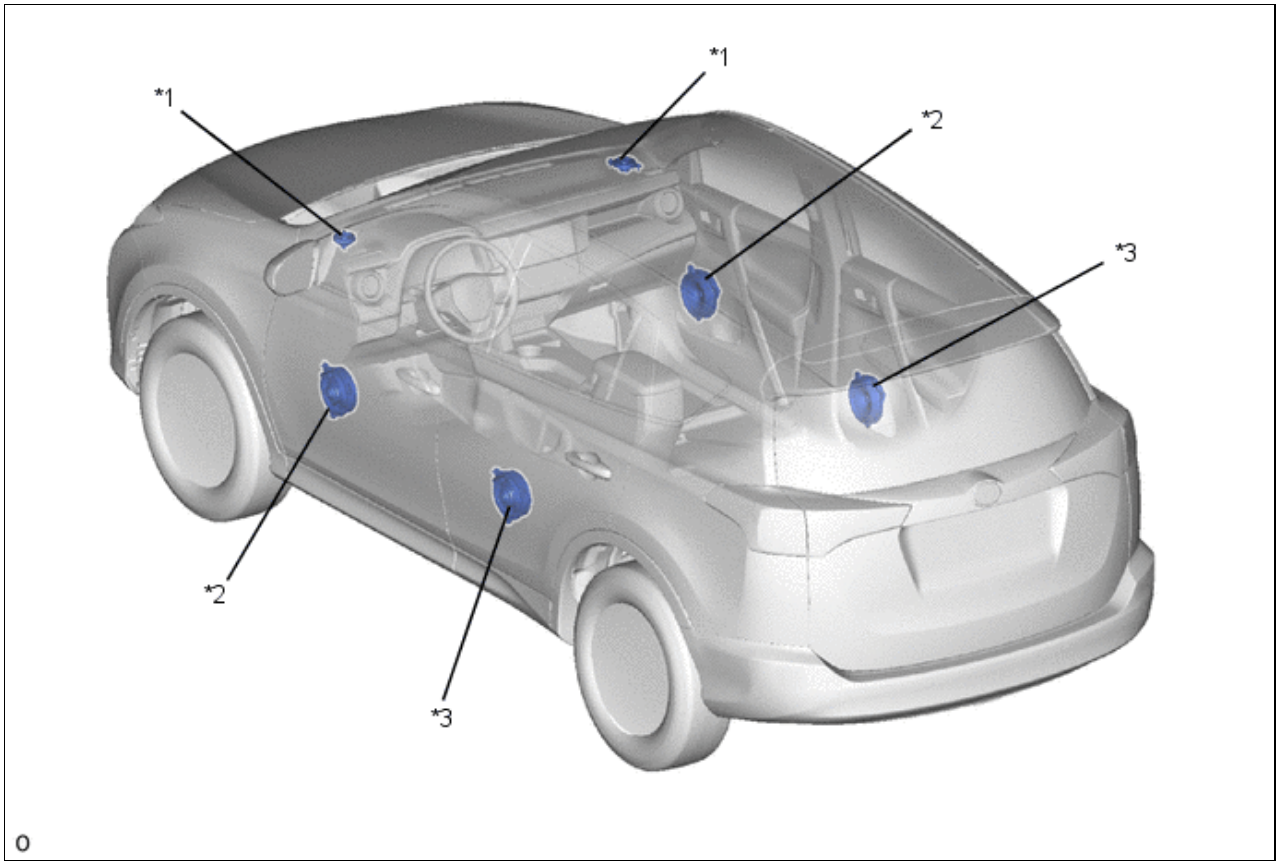


| LOCATION | SPEAKER TYPE | CALIBER | IMPEDANCE | INPUT RANGE |
|---|---|---|---|---|
| *1 | Front No. 2 Speaker Assembly (Tweeter) | 25 mm (1.0 in.) | 4 Ω | 20 W |
| *2 | Front No. 1 Speaker Assembly (Full-range) | 160 mm (6.3 in.) | 4 Ω | 20 W |
| *3 | Rear Speaker Assembly (Full-range) | 160 mm (6.3 in.) | 4 Ω | 20 W |

(d) 11-speaker System

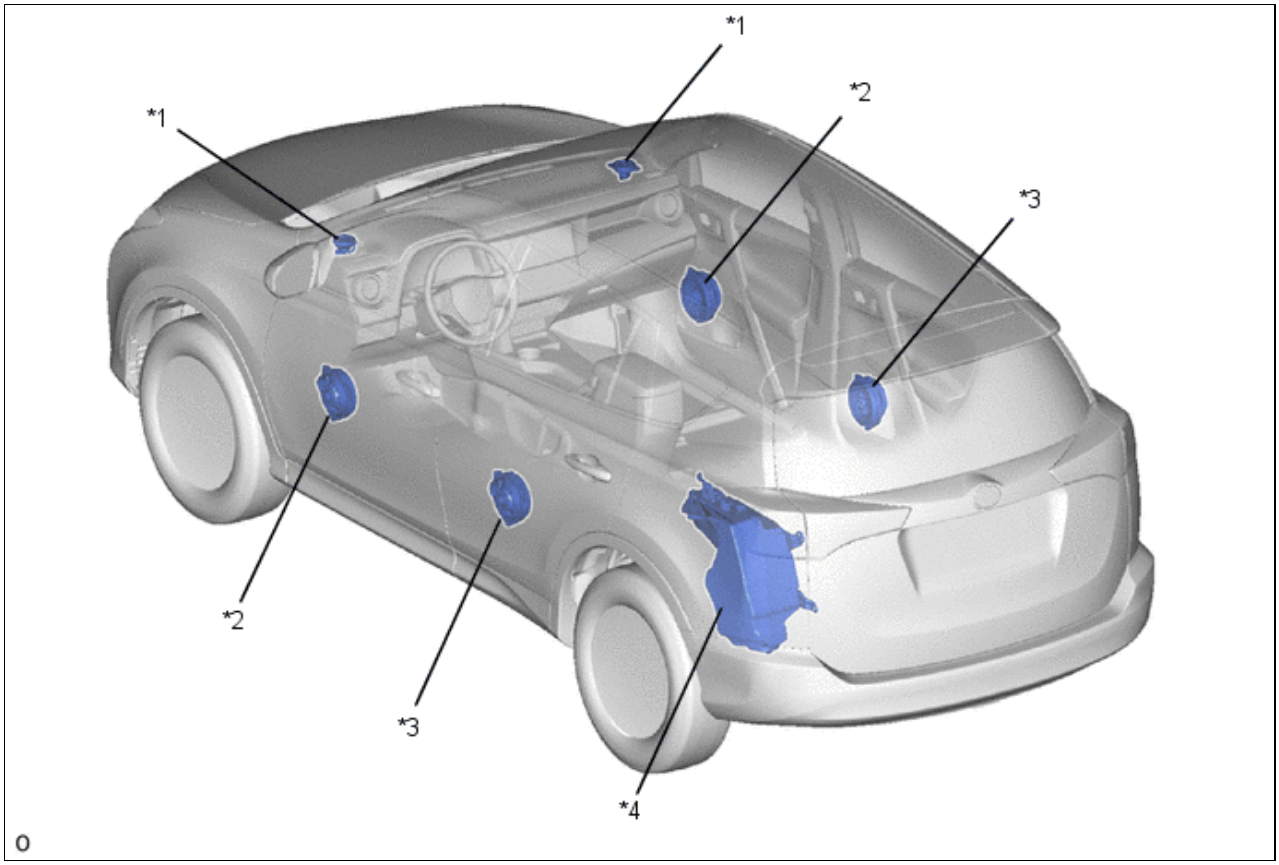


| LOCATION | SPEAKER TYPE | CALIBER | IMPEDANCE | INPUT RANGE |
|---|---|---|---|---|
| *1 | Front No. 2 Speaker Assembly (Tweeter + Mid-range) | 80 mm (3.1 in.) | 4.3 Ω | 3 W |
| *2 | Front No. 1 Speaker Assembly (Woofer) | 170 mm (6.7 in.) | 4.2 Ω | 5 W |
| *3 | Rear Speaker Assembly (Tweeter + Mid-range) | 170 mm (6.7 in.) | 4 Ω | 6 W |
| *4 | Stereo Component Speaker Assembly (Sub-woofer) | 200 mm (7.9 in.) | 4 Ω | 5.2 W |

(e) Bluetooth Hands-free System

| FUNCTION | | | RADIO RECEIVER ASSEMBLY | RADIO AND DISPLAY RECEIVER ASSEMBLY |
|---|---|---|---|---|
| Calling with Bluetooth Phone | By Dial | | ○ | ○ |
| | By Phonebook | | ○ (1000 Items)*1 | ○ (1000 Items)*1 |
| | By Call History*2 | Dialed Number | ○ (10 Items) | ○ (10 Items) |
| | | Received Call | ○ (10 Items) | ○ (10 Items) |
| | | Missed Call | ○ (10 Items) | ○ (10 Items) |
| | | All Call History | ○ | ○ |
| | By Speed Dial*2 | | ○ (5 Items) | ○ (18 Items) |
| | By Voice Recognition*2 | Dialing by Name | - | ○*3 |
| | | Dialing by Phone Number | - | ○*3 |
| | Receiving Call*2 | Received Manually | ○ | ○ |

| | | | | |
|---|---|---|---|---|
| Receive with Bluetooth Phone/Talk on Bluetooth Phone | | Received Refusal | - | ○ |
| | Interrupt Call*2 | | ○ | ○ |
| | Tone Sending | By Dial | ○ | ○ |
| | | By Registered Number | ○ | ○ |
| Recognition/ Connection | Registering Bluetooth Phone | | ○ (5 Bluetooth Phones) | ○ (5 Bluetooth Phones) |
| | Connecting Bluetooth Phone | Connected Automatically | ○ | ○ |
| | | Connected Manually | ○ | ○ |
| Setting | Setting Automatic Connection | | ○ | ○ |

**HINT:**

○ : Available

-: Not Available

*1: It is possible to have up to 1000 items per telephone (Bluetooth phone).

*2: Can be operated while driving.

*3: Deluxe grade

## 3. MAIN FEATURES

(a) XM Satellite Radio

(1) XM satellite radio is a subscription type digital broadcast service.

(2) In addition to the 2 satellites, XM satellite radio is supported by 800 satellite earth stations (repeaters). As a result, it can receive broadcasts throughout the U.S.A. (except Hawaii and Alaska) and most parts of Canada.

(3) If the signals from the satellites are disrupted by a tunnel, gulch or high-rise buildings, the simultaneous broadcast (called "gap filler") through ground based signals helps achieve excellent reception that is free of interruptions.

(4) XM satellite radio produces near CD-quality sound using a digital satellite broadcast. Digital satellite broad cast is especially convenient for long-distance drivers because it is unnecessary to tune to different stations

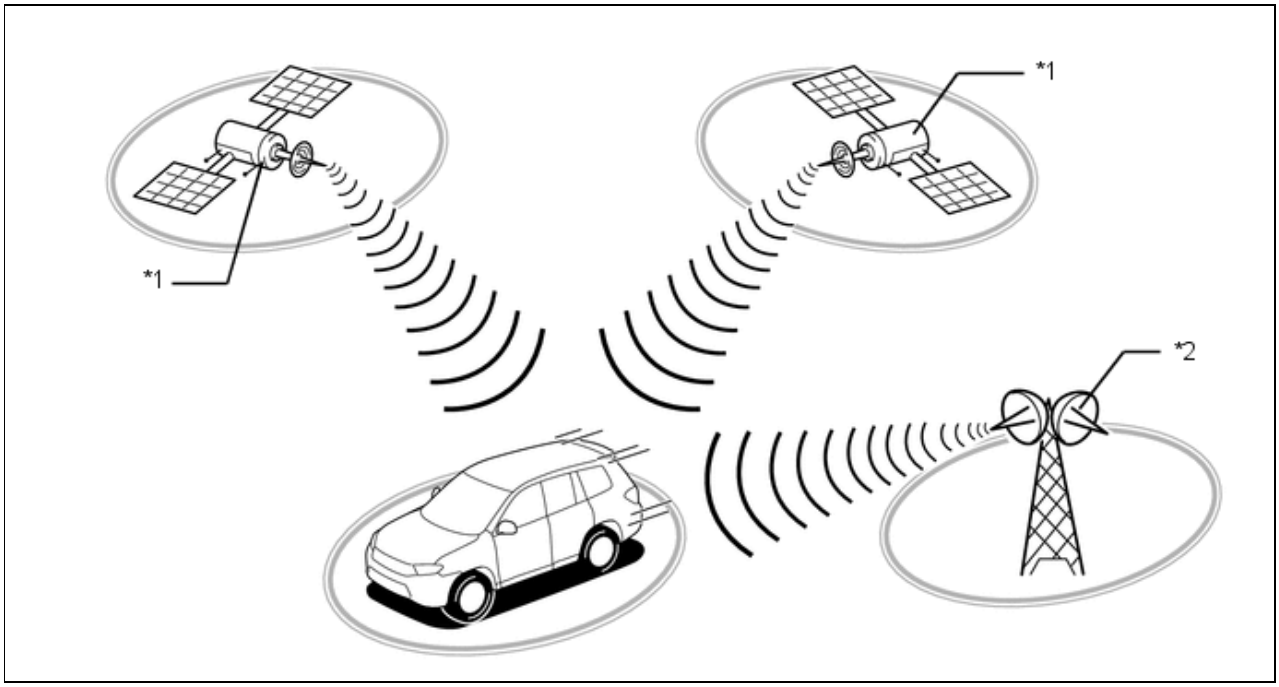


| | | | |
|---|---|---|---|
| *1 | Satellite | *2 | Satellite Earth Station |

(b) Radio and Display Receiver Assembly

(1) A 6.1-inch display with a Thin Film Transistor (TFT) is used.

(2) The audio screen, vehicle information screen and rear view monitor screen* can be displayed.

*: Models with monitor system

(c) Entune Services

- The Entune service makes it possible to operate specified applications on the radio and display receiver assembly by using Bluetooth to connect the navigation system to a cellular phone with the Toyota Entune application installed. These applications are displayed on and operated from the radio and display receiver assembly.
- The Entune service enables communication between the navigation system, application server and content provider utilizing the Toyota-exclusive Entune application installed on a cellular phone.
- The following applications ("Apps") are available for the Entune service: movie ticket purchase, etc. However, since this supported application lineup is subject to change, visit http:// www.toyota.com/Entune/ for details on the Entune service.

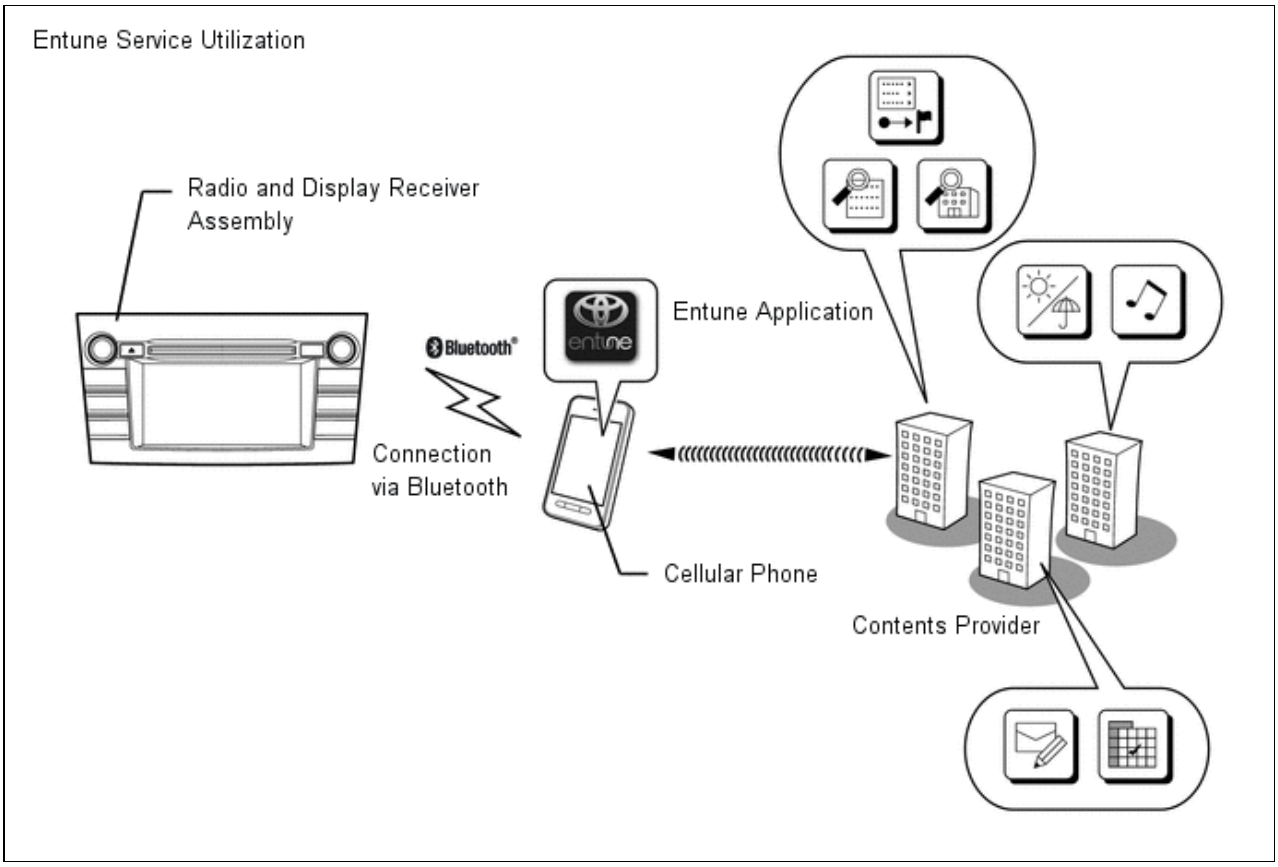


## 4. PRECAUTION

(a) Bluetooth Hands-free System

(1) Some functions of a system that uses a Bluetooth connection may not operate depending on the specification or profile of the Bluetooth phone or Bluetooth audio player that is being used. The Bluetooth specifications and profiles required for the operation are as follows:

| SYSTEM | SPECIFICATION/ PROFILE | ITEM | RADIO RECEIVER ASSEMBLY | RADIO AND DISPLAY RECEIVER ASSEMBLY |
|---|---|---|---|---|
| | Bluetooth Specification | Version 1.1 or higher | Required | Required |
| | | Version 2.1 + Enhanced Data Rate (EDR) or higner | Recommended | Recommended |
| | | Hands Free Profile (HFP) Version 1.0 or higher | Required | Required |

| | | | | |
|---|---|---|---|---|
| Bluetooth Hands-free | Profile | Hands Free Profile (HFP) Version 1.5 or higher | Recommended | Recommended |
| | | Dial-up Networking Profile (DUN) Version 1.1 | - | Recommended |
| | | Object Push Profile (OPP) Version1.0 or higher | Recommended | Recommended |
| | | Personal Area Network (PAN) Version 1.0 | - | Required |
| | | Phone Book Access Profile (PBAP) Version 1.0 or higher | Recommended | Recommended |
| | | Message Access Profile (MAP) Version 1.0 or higher | - | Recommended |
| | | Serial Port Profile (SPP) Version 1.0 or higher | - | Required |
| Bluetooth Audio | Bluetooth Specification | Version 1.1 or higher | Required | Required |
| | | Version 2.1 + Enhanced Data Rate (EDR) or higner | Recommended | Recommended |
| | Profile | Advanced Audio Distribution Profile (A2DP) Version 1.0 higher | Required | Required |
| | | Advanced Audio Distribution Profile (A2DP) Version 1.2 or higher | Recommended | Recommended |
| | | Audio/Video Remote Control Profile (AVRCP) Version 1.0 or higher | Required | Required |
| | | Audio/Video Remote Control Profile (AVRCP) Version 1.4 or higher | Recommended | Recommended |

**HINT:**

- : Not available

(b) Ignition Switch Expressions

(1) The type of ignition switch used on this model differs depending on the specifications of the vehicle. The expressions listed in the table below are used in this section.

| EXPRESSION | IGNITION SWITCH (POSITION) | ENGINE SWITCH (CONDITION) |
|---|---|---|
| Ignition Switch off | LOCK | Off (Lock) |
| Ignition Switch ACC | ACC | On (ACC) |
| Ignition Switch ON | ON | On (IG) |
| Engine Start | START | On (Start) |