| | | |
|---|---|---|
| **Last Modified:** 03-12-2013 | 6.4 F | **Doc ID:** NM1000000005G0M |
| **Model Year:** 2013 | **Model:** RAV4 | **Prod Date Range:** [12/2012 - ] |
| **Title:** THEFT DETERRENT / KEYLESS ENTRY: SMART KEY SYSTEM: SMART KEY CONTROL; 2013 MY RAV4 [12/2012 - ] | | |

# SMART KEY CONTROL

### 1. FUNCTION OF MAIN COMPONENTS

(a) The main components of the smart key system have the following functions:

| COMPONENT | FUNCTION |
|---|---|
| Engine Switch (Push Start Switch)<br>• Transponder Key Amplifier | • Transmits the engine switch signal to the certification ECU.<br>• Receives the ID code and transmits it to the certification ECU when the electrical key transmitter sub-assembly battery is too weak to respond to the tuner based on the No. 1, No. 2 and No. 3 indoor electrical key antenna assemblies. |
| Electrical Key Transmitter Sub-assembly | • The electrical key transmitter sub-assembly consists of a mechanical key, a transmitter for the wireless door lock control, a transceiver for the smart key system and a transponder chip for the immobiliser control.<br>• The electrical key transmitter sub-assembly consists of a mechanical key, a transceiver for the smart key system and a transponder chip for the immobiliser control.<br>• Receives signals from the antennas and returns the ID code to the door control receiver.<br>• When receiving the request signals that are output by the indoor electrical key antenna assemblies, door electrical key antennas and outside electrical key antenna, the electrical key transmitter sub-assembly outputs information such as the key ID and vehicle ID.<br>• When the driver pushes the lock button, unlock button, power back door button* on the electrical key transmitter sub-assembly, the electrical key transmitter sub-assembly outputs a request signal.<br>• When receiving the radio wave that is output by the transponder key amplifier in the engine switch, the electrical key transmitter sub-assembly outputs information such as the key ID and vehicle ID.<br>• The electrical key transmitter sub-assembly integrates with the mechanical key in order to unlock the doors when the electrical key transmitter sub-assembly battery is low. |
| Certification ECU (Smart Key ECU Assembly) | • Turns the power source off, on (ACC), on (IG) or on (Start) in accordance with the shift lever position and the state of the stop light switch assembly.<br>• Controls the start function in accordance with the signals received from the switches and each ECU.<br>• Certifies the ID code received from the door control receiver and transmits the certification results to the steering lock ECU.<br>• Judges and certifies the electrical key transmitter sub-assembly.<br>• Controls the indoor electrical key antenna assemblies, door electrical key antennas and outside electrical key antenna. |

| | | |
|---|---|---|
| | | • Transmits door lock/unlock request signals during the entry function.<br>• Transmits the steering lock/unlock request signals to the steering lock ECU.<br>• Transmits the immobiliser set/unset request signals to the ECM.<br>• Records the ID codes between the certification ECU and steering lock ECU. |
| Stop Light Switch Assembly | | Outputs the state of the brake pedal to the certification ECU. |
| ECM | | • Receives the engine start request signal from the certification ECU, turns on the starter relay assembly, and starts the engine.<br>• Receives the signal from the certification ECU and performs engine ignition and injection. |
| Main Body ECU (Multiplex Network Body ECU) | | • Receives the request signal from the certification ECU and actuates the door lock motors to unlock or lock all the doors.<br>• Transmits the condition of each door to the certification ECU. |
| Outside Door Handle Assembly | Unlock Sensor | Transmits the door unlock request signal to the certification ECU. |
| | Lock Sensor | Transmits the door lock request signal to the certification ECU. |
| | Door Electrical Key Antenna | Receives the request signal from the certification ECU and forms an actuation area around the front doors. |
| Indoor Electrical Key Antenna Assembly | | Receives the request signal from the certification ECU and forms an actuation area inside the interior of the vehicle. |
| Outside Electrical Key Antenna | | Receives the request signal from the certification ECU and forms an actuation area around the back door. |
| Door Control Receiver | | Receives the ID code from the electrical key transmitter sub-assembly in the actuation area and transmits it to the certification ECU. |
| Combination Meter Assembly | Buzzer | • When the certification ECU detects human errors, it warns the driver by sounding the wireless door lock buzzer, blinking the smart watning indicator, and sounding the buzzer in the combination meter assembly in accordance with the request signal from the ECU.<br>• Illuminates or flashes, using different colors to inform the driver of the power source mode or of a system malfunction. |
| | Smart Warning Indicator | |

*: Models with power back door system

## 2. OPERATING CONDITION

(a) The special functions of the smart key system only work when the electrical key transmitter sub-assembly is in the actuation area formed by the 6 antennas.

(b) The No. 1, No. 2 and No. 3 indoor electrical key antenna assemblies form the actuation area of the start function.

(c) The door electrical key antennas and the outside electrical key antenna form the actuation area of the entry function.

function.

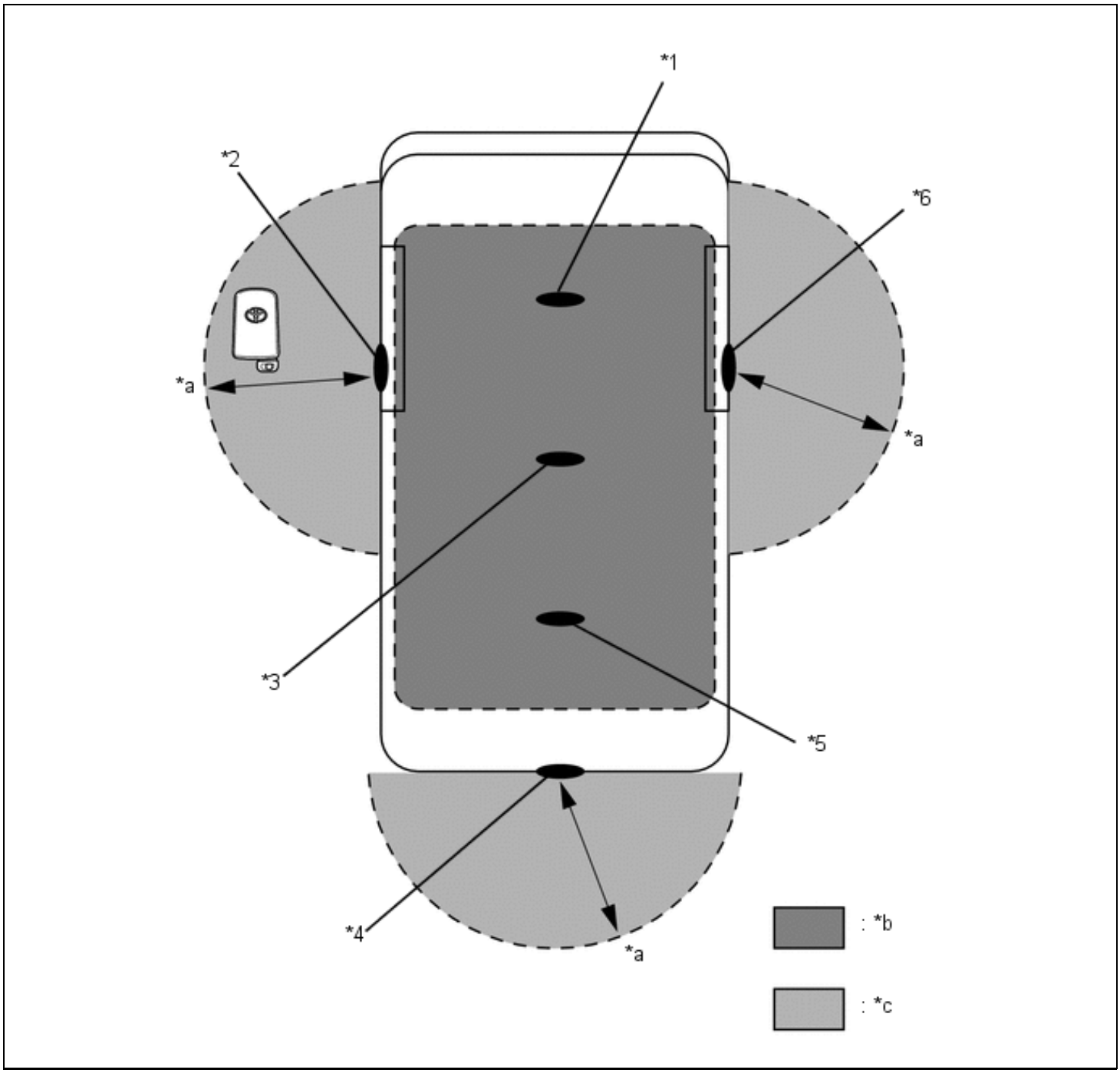


| | | | |
|---|---|---|---|
| *1 | No. 1 Indoor Electrical Key Antenna Assembly | *2 | Door Electrical Key Antenna LH |
| *3 | No. 2 Indoor Electrical Key Antenna Assembly | *4 | Outside Electrical Key Antenna |
| *5 | No. 3 Indoor Electrical Key Antenna Assembly | *6 | Door Electrical Key Antenna RH |
| *a | Approx. 0.7 m to 1.0 m (2.3 ft. to 3.3 ft.) | *b | Interior Actuation Area |
| *c | Exterior Actuation Area | - | - |

| ACTUATION AREA | DETAILS |
|---|---|

| | |
|---|---|
| Interior | The interior actuation area of the indoor electrical key antennas is formed when the driver door is closed, while the brake pedal is depressed, when the engine switch is pressed, when a warning is activated, or when the lock sensor or lock switch is on. |
| Exterior | The exterior actuation area formed by the door electrical key antennas and the outside electrical key antenna is approx. 0.7 m to 1.0 m (2.3 ft. to 3.3 ft.) from the outside door handle assembly of the front doors, or the outside electrical key antenna. |
| Around Front Door | The exterior actuation area of the door electrical key antennas is formed by transmitting a request signal every 0.25 seconds while the engine switch is off and each door is locked. In this way, the proximity of a key can be detected. When locking the door using the lock sensor on the outside door handle assembly, the actuation area is formed when the lock sensor is touched. |
| Around Back Door | The exterior actuation area of the outside electrical key antenna is formed when the lock switch or back door opener switch is on. |

**3. FUNCTION**

(a) Start Function

(1) The start function has different power source modes to suit the brake pedal condition and shift lever position.

(2) When the driver carrying an electrical key transmitter sub-assembly enters the vehicle while the power source mode is off and presses the engine switch without depressing the brake pedal, the power source mode turns on (ACC) to show smart warning indicator will blink green. With each pressing of the engine switch, the power source mode switches as follows: off → on (ACC) → on (IG) → off.

(3) When the driver who is carrying an electrical key transmitter sub-assembly enters the vehicle while the power source mode is off, and depresses the brake pedal while the shift lever is in P or N, the smart warning indicator illuminates green. Pressing the engine switch with the smart warning indicator illuminated will cause the engine to start.

(4) When starting the engine with the vehicle stopped, pressing the engine switch while the shift lever is in P will cause the power source mode to turn off. Pressing the engine switch when the shift lever is in any position other than P will cause the mode to turn on (ACC).

Transition of Power Source Mode

| Engine Switch Condition | Shift Lever | | | | | | | |
|---|---|---|---|---|---|---|---|---|
| | P | | | | N | | Except P and N | |
| | Engine Switch Pushed | Engine Switch Pushed with Brake Pedal Depressed | After 20 Minutes | After 1 Hour | Engine Switch Pushed | Engine Switch Pushed with Brake Pedal Depressed | Engine Switch Pushed | Engine Switch Pushed with Brake Pedal Depressed |
| Off | | | | | | | | |
| On (ACC) | | | | | * * | * | * * | * |
| On (IG) | | | | | | | | |
| ON (Start) | | | | | | | *a | *a |

*a: Except when the shift lever is in N and the steering lock is locked

: Transition

: Only when the key certification is OK

: Only when the vehicle is stopped

- If the engine switch is pressed for 2 seconds or more or pressed 3 times or more in a row, the engine is stopped and the power source mode is turned on (ACC).

: Power transition is available only when the shift lever is moved to P after * has come into effect.

(5) Transition of the power source mode when the electrical key transmitter sub-assembly battery is low or the electrical key transmitter sub-assembly is not operating normally due to an electromagnetic interference is as follows:

1. The driver uses the mechanical key to unlock the door and enters the vehicle while carrying the electrical key transmitter sub-assembly.
2. The driver places the TOYOTA mark of the electrical key transmitter sub-assembly in contact with the front of the engine switch while depressing the brake pedal.
3. Within approximately 10 seconds after the buzzer sounds, the driver releases the brake pedal and presses the engine switch.
4. With each pressing of the engine switch, the power source mode changes as follows: off → on (ACC) → on (IG) → off.

(6) When starting the engine while the electrical key transmitter sub-assembly battery is low or the electrical key transmitter sub-assembly is not operating normally due to an electromagnetic interference:

1. The driver uses the mechanical key to unlock the door and enters the vehicle while carrying the electrical key transmitter sub-assembly.
2. The driver places the TOYOTA mark of the electrical key transmitter sub-assembly in contact

2. The driver places the TOYOTA mark of the electrical key transmitter sub-assembly in contact with the front of the engine switch while depressing the brake pedal while the shift lever is in P or N.
3. Within approximately 10 seconds after the buzzer sounds and the smart warning indicator illuminates green, the driver presses the engine switch while depressing the brake pedal.
4. Pressing the engine switch starts the engine.

**HINT:**

- Normally, the operation of the engine switch is disabled while the vehicle is being driven. However, if the engine must be stopped in an emergency while the vehicle is in motion, the driver can press the engine switch either 3 times in rapid succession or for approximately 2 seconds or more to stop the engine.
- If no signals are transmitted to the power management control ECU due to a malfunction in the stop light switch assembly or park/neutral position switch assembly, the engine will not start even if the driver presses the engine switch while depressing the brake pedal. In this case, the driver can start the engine by the following operations. Press the engine switch to turn the power source mode from off to on (ACC), and press the engine switch again and hold it for 15 seconds or more.
- The above 2 operations must be applied only in emergency situations. Under normal conditions, the engine must not be stopped by pressing the engine switch during driving or started without depressing the brake pedal when the shift lever is in any position other than P or N.

(b) Entry Function

(1) The entry function consists of the following functions:

| FUNCTION | OUTLINE |
|---|---|
| Wireless Door Lock Control | This function is a convenient system for locking and unlocking all the doors at a distance. The operation of this function in the smart key system is the same as that of the wireless door lock control system. However, the receiver in the certification ECU uses a door control receiver to perform the control. |
| Entry Illumination | When an electrical key transmitter sub-assembly enters the exterior actuation area of the door electrical key antenna, each interior light and engine switch illumination light will illuminate. |
| Entry Unlock Mode Switching | Allows switching between 2 modes that can be operated with the entry unlock function.<br>• All Door Mode<br>• Driver Door Mode |
| Entry Unlock | Unlocks the doors by the outside door handle assembly being held and the unlock sensor being touched while the electrical key transmitter sub-assembly is in the exterior actuation area of the door electrical key antenna.<br>• The driver outside door handle assembly unlocks the driver door.<br>• The front passenger outside door handle assembly unlock all doors. |
| Entry Lock | All doors are locked by touching the lock sensor of the driver or front passenger outside door handle assembly or by pressing the lock switch of the back door. |
| Entry Back Door Unlock | The back door is unlocked by pressing the back door opener switch of the back door. |
| Key Confine Prevention | Prevents the confinement of the electrical key transmitter sub-assembly if the door is locked from the outside door handle assembly or lock switch while the electrical key transmitter sub-assembly is still inside the vehicle. |
| Key Cancel | The following key functions can be canceled by following certain procedures:<br>• Entry unlock/lock<br>• Back door open |

| | |
|---|---|
| Key Cancel | • Back door open<br>• Prevention of key confinement<br>• Warning |
| Battery Saving | To prevent the electrical key transmitter sub-assembly battery and the vehicle battery from becoming discharged, the battery saving function activates when the vehicle remains unused for a long period of time or the electrical key transmitter sub-assembly has been detected in the exterior actuation area for more than 10 minutes. |
| Warning | The smart key system causes the certification ECU to sound the buzzer in the combination meter assembly and uses the smart warning indicator in order to alert the driver. |
| Key Code Registration | A total of 7 keys can be registered. Key registration enables the registering (writing and storing) of transmitter recognition codes in the EEPROM that is contained in the certification ECU. |

(c) Wireless Door Lock Control Function

(1) The wireless door lock control function has the following functions:

| FUNCTION | OUTLINE |
|---|---|
| All Doors Lock | Pressing the lock button of the electrical key transmitter sub-assembly locks all doors. |
| All Doors Unlock (2-step Unlock) | Pressing the unlock button of the electrical key transmitter sub-assembly once unlocks the driver door, and pressing it again within 5 seconds unlocks all the doors. |
| All Doors Unlock | Pressing the unlock button of the electrical key transmitter sub-assembly unlocks all doors. |
| Power Back Door Open or Close* | Pressing the power back door button for approximately 1 second opens and closes the power back door. |
| Answer Back | When the doors are being locked or unlocked through the operation of the electrical key transmitter sub-assembly, the wireless door lock buzzer sounds and the hazard lights blink once during locking and twice during unlocking. Also, the answer back function operates when the doors are locked by the auto relock function. |
| Automatic Relock | If none of the doors are opened within 60 seconds after they have been unlocked by the wireless door lock control, all the doors will be locked again automatically. |
| Door Ajar Warning | If any door is open or ajar, pressing the lock button of the electrical key transmitter sub-assembly will cause the wireless door lock buzzer to sound for about 5 seconds. |
| Customization | The on or off setting of some functions and settings can be performed using the Techstream or multi-display. In addition, some functions are not available depending on the specification. For details, refer to the Repair Manual. |

*: Models with power back door system

(d) Entry Unlock Mode Switching

(1) The entry unlock mode can be switched between the following 2 modes in accordance with the driver's intention:

- All Door Mode
- Driver Door Mode (Default)

(2) In all door mode, all doors are unlocked by touching the driver or front passenger touch sensor. In driver door mode, only the driver door is unlocked by touching the driver side touch sensor, and all doors are unlocked by touching the front passenger side touch sensor.

(3) The switching of the entry unlock mode is performed when the power source mode is off and the key indicator light is not illuminated. Within a distance range of 1 m from the vehicle, press and hold both the lock and unlock buttons of the key for approximately 5 seconds.

(4) During the switching of the entry unlock mode, the wireless door lock buzzer or the buzzer combination meter assembly will sound to inform the driver of the state of the entry unlock mode.

| Mode | Wireless Door Lock Buzzer | Buzzer in Combination Meter Assembly |
|---|---|---|
| Driver Door (Default) | Sounds 3 times | Sounds once |
| All Door | Sounds 2 times | Sounds once |

(e) Entry Unlock Function

(1) When the electrical key transmitter sub-assembly is in the actuation area surrounding the driver seat, gripping the driver side outside door handle assembly will unlock the driver door only, and gripping the passenger side outside door handle assembly will unlock all doors.*1

(2) When the electrical key transmitter sub-assembly is in any of the exterior actuation areas, all doors are unlocked by grabbing the driver or front passenger outside door handle assembly.*2

(3) After all doors have been unlocked, the wireless door lock buzzer sounds twice as an answer back and the hazard lights flash twice at the same time.

**HINT:**

*1: Driver door mode

*2: All door mode

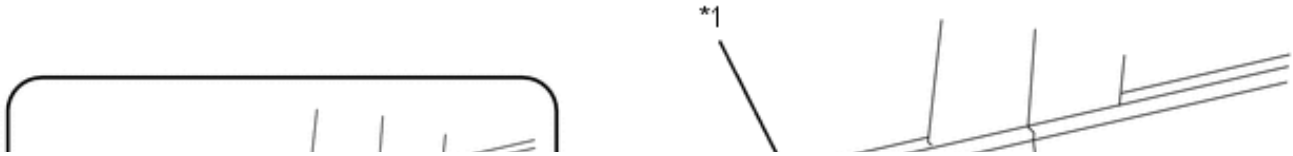

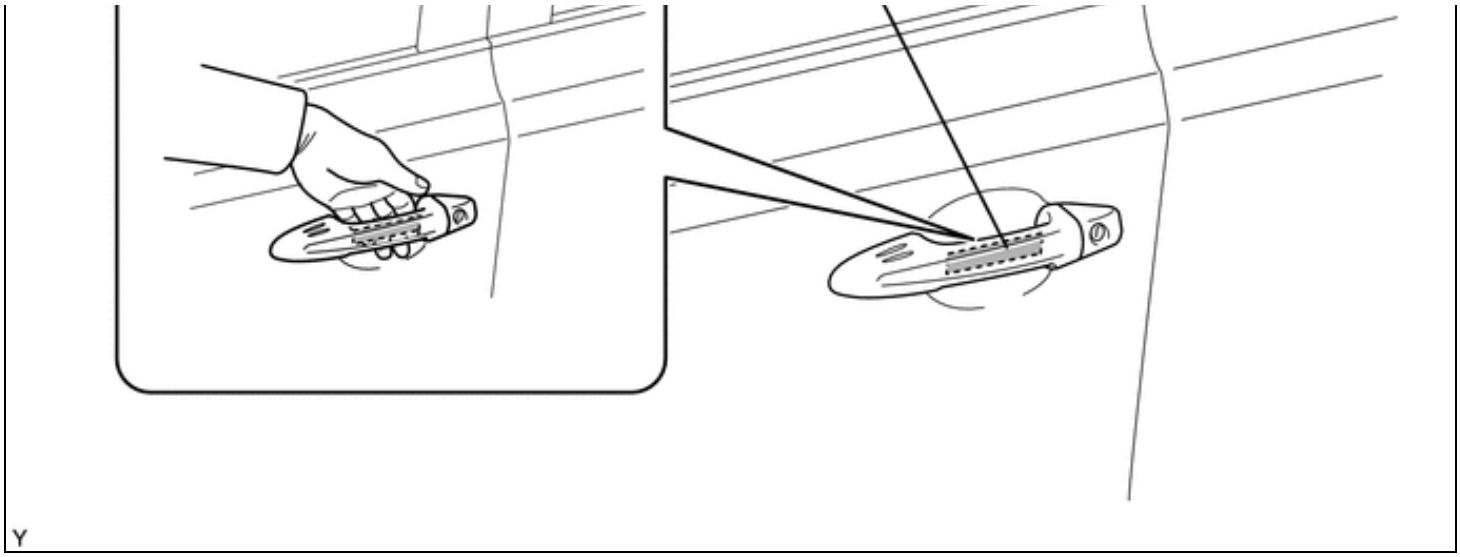


| | | | |
|---|---|---|---|
| *1 | Unlock Sensor | - | - |

(f) Entry Lock Function

(1) When the electrical key transmitter sub-assembly is in any of the exterior actuation areas, all doors are locked by touching the lock sensor of the driver or front passenger outside door handle assembly or by pressing the lock switch of the back door.

(2) After all doors have been locked, the wireless door lock buzzer sounds once as an answer back and the hazard lights flash once at the same time.

(3) If the doors do not lock when the lock sensor on the topside of an outside door handle assembly is touched, touch the lock sensors on the top and bottom sides simultaneously by pinching the handle.

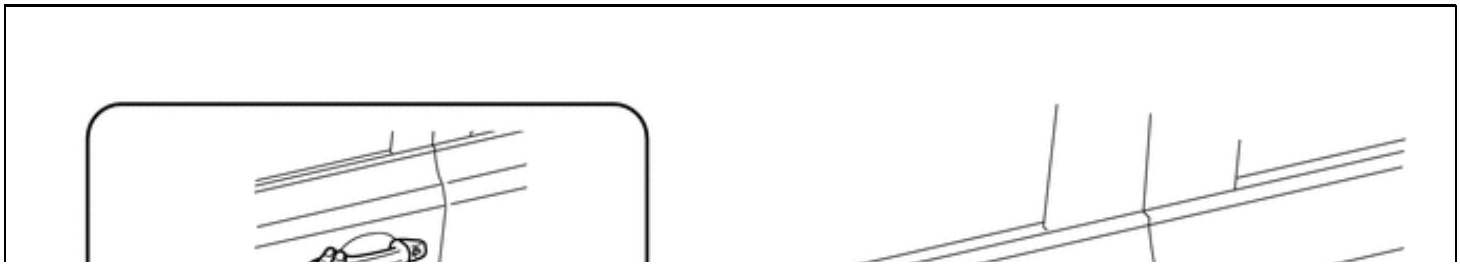

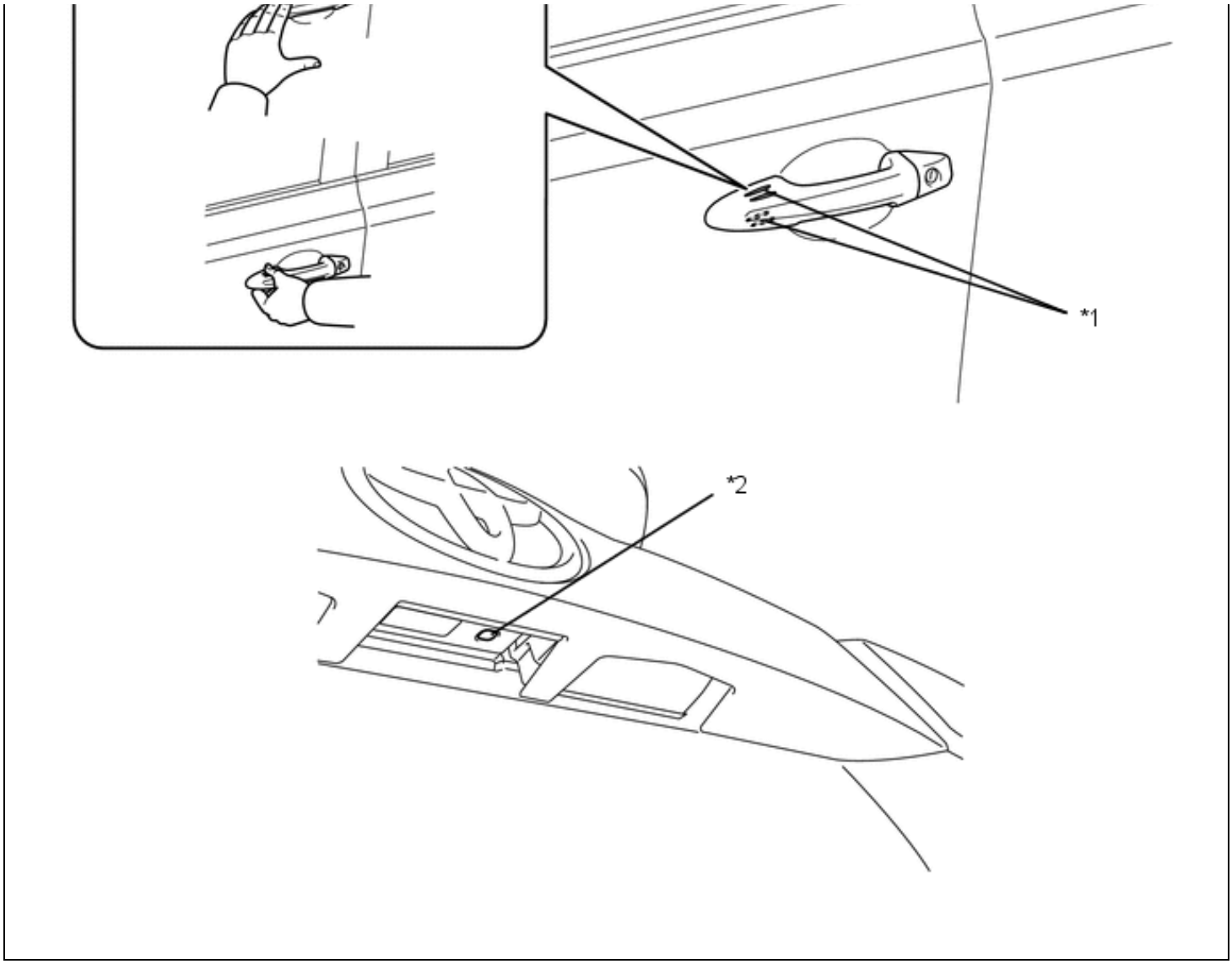


| | | | |
|---|---|---|---|
| *1 | Lock Sensor | *2 | Lock Switch |

(g) Entry Back Door Unlock Function

(1) When the electrical key transmitter sub-assembly is in the actuation area surrounding the back door, pressing the back door opener switch will unlock the back door.

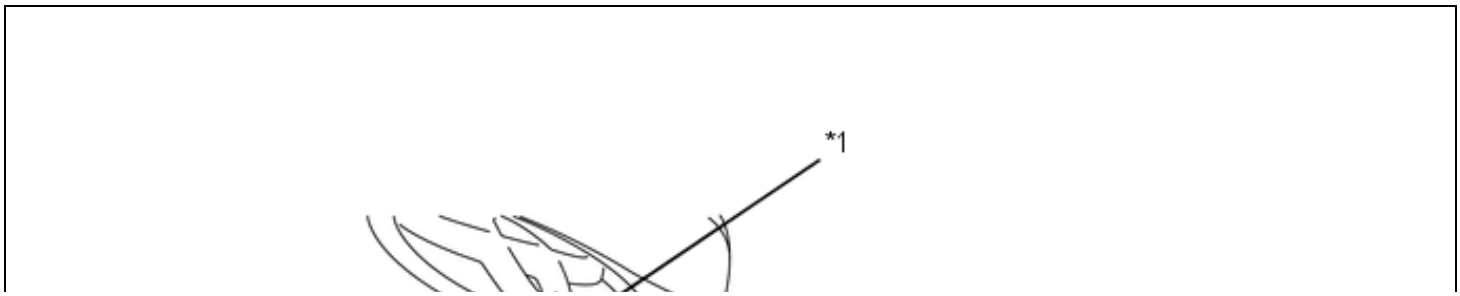

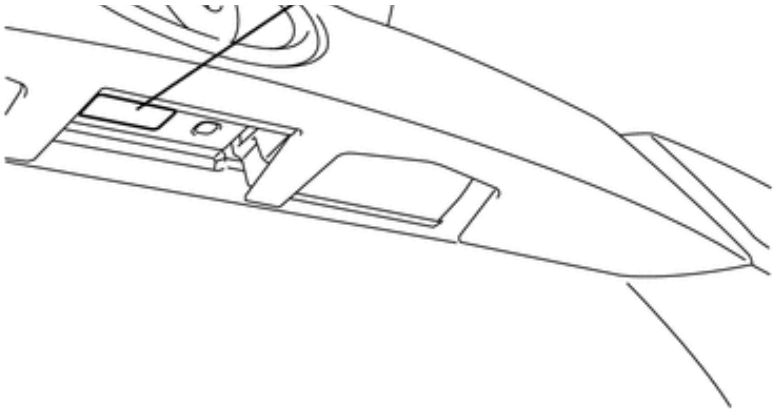

| | | | |
|---|---|---|---|
| *1 | Back Door Opener Switch | - | - |

(h) Warning Function

(1) When any of the situations below occur, the smart key system sounds the wireless door lock buzzer, sounds a buzzer in the combination meter assembly, and illuminates the smart warning indicator in order to alert the driver.

| SITUATION | CONDITION |
|---|---|
| A | The driver opens the driver door and tries to leave the vehicle with the shift lever in any position except P. |
| B | The driver door is opened while the steering is unlocked. |
| C | The occupant leaves with the electrical key transmitter sub-assembly. |
| D | The engine switch is operated while the electrical key transmitter sub-assembly is outside the actuation area. |
| E | The vehicle is driven without an electrical key transmitter sub-assembly. |
| F | The entry lock is operated while the electrical key transmitter sub-assembly is inside the vehicle. |
| G | The entry lock is operated while any of the doors is ajar. |
| H | An electrical key transmitter sub-assembly is confined inside the vehicle interior. |
| I | The electrical key transmitter sub-assembly battery is low. |
| J | The steering lock cannot be released. |
| K | An abnormality related to the smart key system is detected. |
| L | An engine start method is displayed. |
| M | The system assumes that the driver is unfamiliar with the proper way to start the engine. |
| N | An attempt is made to turn off the engine switch with the shift lever in any position other than P or N. |
| O | Automatic power off operation occurs. |
| P | Immobiliser function certification completion occurs. |

(2) In situation A

There are 2 patterns for situation A.

Pattern 1:

When the shift lever is in a position other than P, the engine switch is in a mode other than off and the driver opens the door and attempts to get out of the vehicle, the following control is performed:

| | | | |
|---|---|---|---|
| Possible Effects without Warning | Sudden vehicle start, vehicle theft, vehicle roll-away | | |
| Warning Condition | The warning is started when all the following conditions are satisfied:<br>• Power source is in a mode other than off.<br>• Shift lever is in any position except P.<br>• Driver door is opened.<br>• Vehicle speed is 0 km/h (0 mph). | | |
| Warning Method | Combination Meter Assembly | Buzzer | Sounds continuously |
| | | Smart Warning Indicator | - |
| | Wireless Door Lock Buzzer | | - |
| Warning Stop Condition | The warning is stopped when one of the following conditions is met:<br>• Power source mode is turned off.<br>• Shift lever is moved to P.<br>• Driver door is closed.<br>• Vehicle speed is more than 5 km/h (3 mph). | | |

Pattern 2:

In addition to the conditions of pattern 1, the driver closes the door and attempts to leave the vehicle holding the electrical key transmitter sub-assembly. In these situations, the following control is performed:

| | | | |
|---|---|---|---|
| Possible Effects without Warning | Sudden vehicle start, vehicle theft, vehicle roll-away | | |
| Warning Condition | The warning is started when all the following conditions are satisfied:<br>• Power source mode is anything other than off.<br>• Shift lever is in any position except P.<br>• The state of the driver door is changed from open to closed.<br>• No electrical key transmitter sub-assembly is detected in the vehicle interior.<br>• Vehicle speed is 0 km/h (0 mph). | | |
| Warning Method | Combination Meter Assembly | Buzzer | Sounds continuously |
| | | Smart Warning Indicator | Blinks (yellow) |
| | Wireless Door Lock Buzzer | | Sounds continuously |
| Warning Stop | The warning is stopped when one of the following conditions is met: | | |
| | Combination Meter Assembly | Buzzer | • Power source mode is off.<br>• Shift lever is in P.<br>• Vehicle speed is more than 5 km/h (3 mph).<br>• An electrical key transmitter sub-assembly is |
| | Wireless Door Lock Buzzer | | |

| | | | |
|---|---|---|---|
| Warning Stop Condition | Wireless Door Lock Buzzer | | • An electrical key transmitter sub-assembly is detected in the vehicle interior. |
| | Combination Meter Assembly | Smart Warning Indicator | • Power source mode is off.<br>• An electrical key transmitter sub-assembly is detected in the vehicle interior. |

(3) In situation B

There are 3 patterns for situation B.

Pattern 1:

When the driver opens the driver door and tries to leave the vehicle while the shift lever is in P, the power source mode is not off and the steering is unlocked, the following control is performed:

| | | | |
|---|---|---|---|
| Possible Effects without Warning | Vehicle theft | | |
| Warning Condition | The warning is started when all the following conditions are satisfied:<br>• Power source mode is on (ACC).<br>• Driver door is opened.<br>Or when all of the following conditions are satisfied for 1 second:<br>• Power source mode is off.<br>• Steering is unlocked.<br>• Driver door is opened. | | |
| Warning Method | Combination Meter Assembly | Buzzer | Intermittently sounds |
| | | Smart Warning Indicator | - |
| | Wireless Door Lock Buzzer | | - |
| Warning Stop Condition | The warning is stopped when one of the following conditions is met:<br>• Power source mode is on (IG).<br>• Driver door is closed.<br>• Power source mode is off and steering is locked. | | |

Pattern 2:

In addition to the conditions of pattern 1, the driver closes the driver door and attempts to leave the vehicle holding the electrical key transmitter sub-assembly. In these situations, the following control is performed:

| | |
|---|---|
| Possible Effects without Warning | Vehicle theft |
| Warning Condition | The warning is started when all the following conditions are satisfied:<br>• Power source mode is anything other than off.<br>• Shift lever is in any position except P.<br>• The state of the driver door is changed from open to closed.<br>• No electrical key transmitter sub-assembly is detected in the vehicle interior.<br>• Vehicle speed is 0 km/h (0 mph). |

| | | | |
|---|---|---|---|
| Warning Method | Combination Meter Assembly | Buzzer | Sounds once |
| | | Smart Warning Indicator | Blinks (yellow) |
| | Wireless Door Lock Buzzer | | Sounds 3 times |
| Warning Stop Condition | The warning is stopped when one of the following conditions is met:<br>• Power source mode is off.<br>• An electrical key transmitter sub-assembly is detected in the vehicle interior. | | |

Pattern 3:

In addition to the conditions of pattern 2, when an attempt is made to unlock all the doors using the entry function and the lock sensor is touched, the following control is performed:

| | | | |
|---|---|---|---|
| Possible Effects without Warning | Vehicle theft | | |
| Warning Condition | The warning is started when all the following conditions are satisfied:<br>• Power source mode is anything other than off.<br>• Shift lever is in P.<br>• No electrical key transmitter sub-assembly is detected in the vehicle interior.<br>• Electrical key transmitter sub-assembly is detected in the vehicle exterior.<br>• Touching of the lock sensor is detected.<br>• Vehicle speed is 0 km/h (0 mph). | | |
| Warning Method | Combination Meter Assembly | Buzzer | Sounds once |
| | | Smart Warning Indicator | Blinks (yellow) |
| | Wireless Door Lock Buzzer | | Sounds continuously |
| Warning Stop Condition | The warning is stopped when one of the following conditions is met: | | |
| | Combination Meter Assembly | Buzzer | Sounds once |
| | Wireless Door Lock Buzzer | | • Approx. 5 seconds have elapsed from the time the warning started.<br>• Power source mode is off.<br>• Shift lever is in any position other than P.<br>• Vehicle speed is more than 5 km/h (3 mph).<br>• An electrical key transmitter sub-assembly is detected in the vehicle interior.<br>• Any door is opened.<br>• Any door is closed. |
| | Combination Meter Assembly | Smart Warning Indicator | • Power source mode is off.<br>• An electrical key transmitter sub-assembly is detected in the vehicle interior. |

(4) In situation C

If the power source mode is anything other than off when a passenger gets out of the vehicle while holding the electrical key transmitter sub-assembly, the following control is performed:

| | | | |
|---|---|---|---|
| Possible Effects without Warning | Engine cannot be restarted. | | |
| Warning Condition | The warning is started when all the following conditions are satisfied:<br>• Power source is in a mode other than off.<br>• The state of any door other than the driver door is changed from open to closed.<br>• No electrical key transmitter sub-assembly is detected in the vehicle interior.<br>• Vehicle speed is 0 km/h (0 mph). | | |
| Warning Method | Combination Meter Assembly | Buzzer | Sounds once |
| | | Smart Warning Indicator | Blinks (yellow) |
| | Wireless Door Lock Buzzer | | Sounds 3 times |
| Warning Stop Condition | The warning is stopped when one of the following conditions is met:<br>• Power source mode is turned off.<br>• An electrical key transmitter sub-assembly is detected in the vehicle interior. | | |

(5) In situation D

When the engine switch is pressed while the electrical key transmitter sub-assembly is not in the cabin or the engine cannot be started properly, the following control is performed:

| | | | |
|---|---|---|---|
| Possible Effects without Warning | Driver confusion | | |
| Warning Condition | The warning is activated when all of the following conditions are met:<br>• Immobiliser function is set.<br>• No electrical key transmitter sub-assembly is detected in the vehicle interior.<br>• The engine switch is pressed. | | |
| Warning Method | Combination Meter Assembly | Buzzer | Sounds once |
| | | Smart Warning Indicator | Blinks (yellow) |
| | Wireless Door Lock Buzzer | | - |
| Warning Stop Condition | The warning is stopped when one of the following conditions is met:<br>• Approx. 15 seconds have elapsed from the time the warning started.<br>• An electrical key transmitter sub-assembly is detected in the vehicle interior. | | |

(6) In situation E

The driver started driving without having an electrical key transmitter sub-assembly in the vehicle interior. In this situation, the following control is performed:

| | | | |
|---|---|---|---|
| Possible Effects without Warning | Engine cannot be restarted. | | |
| Warning Condition | The warning is activated when all of the following conditions are met:<br>• Power source mode is on (IG).<br>• Warnings have occurred under situation C.<br>• Vehicle speed is more than 5 km/h (3 mph).<br>• No electrical key transmitter sub-assembly is detected in the vehicle interior. | | |
| Warning Method | Combination Meter Assembly | Buzzer | Sounds 9 times |
| | | Smart Warning Indicator | Blinks (yellow) |
| | Wireless Door Lock Buzzer | | - |
| Warning Stop Condition | The warning is stopped when one of the following conditions is met:<br>• Power source mode is turned off.<br>• An electrical key transmitter sub-assembly is detected in the vehicle interior. | | |

(7) In situation F

If the electrical key transmitter sub-assembly is left in the vehicle interior and the lock sensor is touched, the following control is performed:

| | | | |
|---|---|---|---|
| Possible Effects without Warning | Vehicle theft | | |
| Warning Condition | The warning is activated when all of the following conditions are met:<br>• Power source mode is off.<br>• All doors are closed.<br>• An electrical key transmitter sub-assembly is detected in the vehicle interior.<br>• Lock sensor is touched.<br>• Any door is unlocked.<br>• Vehicle speed is 0 km/h (0 mph). | | |
| Warning Method | Combination Meter Assembly | Buzzer | - |
| | | Smart Warning Indicator | - |
| | Wireless Door Lock Buzzer | | Sounds continuously |
| Warning Stop Condition | The warning is stopped when one of the following conditions is met:<br>• Power source mode is anything other than off.<br>• Vehicle speed is more than 5 km/h (3 mph).<br>• Doors are locked through the manual lock, wireless door lock function or key-linked lock operation.<br>• Approx. 5 seconds have elapsed from the time the warning started.<br>• The state of any door is changed from closed to open. | | |

(8) In situation G

Any door is ajar, and the locking of the doors is attempted through the entry lock function by touching the lock sensor of an outside door handle assembly. In this situation, the following control is performed:

| | | | |
|---|---|---|---|
| Possible Effects without Warning | Vehicle theft | | |
| Warning Condition | The warning is activated when all of the following conditions are met:<br>• Power source mode is off.<br>• Any door (other than the one performing the entry operation) is open.<br>• Lock sensor is touched.<br>• Electrical key transmitter sub-assembly is detected in the vehicle exterior. | | |
| Warning Method | Combination Meter Assembly | Buzzer | - |
| | | Smart Warning Indicator | - |
| | Wireless Door Lock Buzzer | | Sounds continuously |
| Warning Stop Condition | The warning is stopped when one of the following conditions is met:<br>• Approx. 5 seconds have elapsed from the time the warning started.<br>• Power source mode is anything other than off.<br>• All doors are closed.<br>• Doors are unlocked through the wireless door lock control function.<br>• Entry unlock operation is performed. | | |

(9) In situation H

An electrical key transmitter sub-assembly is confined inside the vehicle interior. In this situation, the following control is performed:

| | | | |
|---|---|---|---|
| Possible Effects without Warning | Vehicle theft | | |
| Warning Condition | The warning is activated when all of the following conditions are met:<br>• Keyless lock function* has been operated.<br>• An electrical key transmitter sub-assembly is detected in the vehicle interior.<br>• Vehicle speed is 0 km/h (0 mph). | | |
| Warning Method | Combination Meter Assembly | Buzzer | Sounds once |
| | | Smart Warning Indicator | - |
| | Wireless Door Lock Buzzer | | Sounds continuously |
| Warning Stop Condition | The warning is stopped when one of the following conditions is met:<br>• The power source mode is switched.<br>• Doors are locked through the manual lock, wireless door lock function or key-linked lock operation.<br>• Vehicle speed is more than 5 km/h (3 mph).<br>• The state of any door is changed from closed to open.<br>• Approx. 5 seconds have elapsed from the time the warning started. | | |

| | |
|---|---|
| | • Approx. 5 seconds have elapsed from the time the warning started. |

**HINT:**

*: With all closed doors locked, an open door is put in the locked door lock position, and is closed while pulling the outside door handle assembly, thus locking all the doors.

(10) In situation I

The electrical key transmitter sub-assembly battery is low. In this situation, the following control is performed:

| | | | |
|---|---|---|---|
| Possible Effects without Warning | • Usability function<br>• Smart key system does not function. | | |
| Warning Condition | The warning is activated when all of the following conditions are met:<br>• After the power source mode has been on (IG) continuously for approx. 20 minutes or more, it is changed from on (IG) to off.<br>• Electrical key transmitter sub-assembly battery is low.<br>• An electrical key transmitter sub-assembly is detected in the vehicle interior.<br>• Vehicle speed is 0 km/h (0 mph).<br>Or all of the following conditions are satisfied:<br>• Power source mode has been turned from off to on (IG) and the engine is running.<br>• Electrical key transmitter sub-assembly battery is low.<br>• An electrical key transmitter sub-assembly is detected in the vehicle interior.<br>• Vehicle speed is 0 km/h (0 mph).<br>• Warnings have occurred under situation I.* | | |
| Warning Method | Combination Meter Assembly | Buzzer | Sounds once |
| | | Smart Warning Indicator | Blinks (yellow) |
| | Wireless Door Lock Buzzer | | - |
| Warning Stop Condition | The warning is stopped when one of the following conditions is met:<br>• Approx. 15 seconds have elapsed from the time the warning started.<br>• Vehicle speed is more than 5 km/h (3 mph). | | |

**HINT:**

*: The power source mode is turned off 20 minutes after being turned on (IG).

(11) In situation J

The steering lock cannot be released, or the shift lever is moved to any position other than P before the steering lock is completely unlocked. In these situations, the following control is performed:

| | | | |
|---|---|---|---|
| Possible Effects without Warning | Usability function | | |
| Warning Condition | The steering lock does not release when performing the release operation, preventing the engine from starting. | | |
| | Combination Meter Assembly | Buzzer | Sounds once |

| | | | |
|---|---|---|---|
| Warning Method | Combination Meter Assembly | Smart Warning Indicator | Quickly blinks (green) |
| | Wireless Door Lock Buzzer | | - |
| Warning Stop Condition | The warning is stopped when one of the following conditions is met:<br>• Approx. 15 seconds have elapsed from the time the warning started.<br>• Steering lock is unlocked. | | |

(12) In situation K

When an abnormality related to the smart key system is detected, the following control is performed:

| | | | |
|---|---|---|---|
| Possible Effects without Warning | Smart key system does not function. | | |
| Warning Condition | The warning is activated when one of the following conditions is met:<br>• Steering lock actuator assembly malfunction or steering lock/unlock detection switch failure causes.<br>• An abnormality in the IG relay output circuit has occurred 3 times or more.<br>• An abnormality is determined in vehicle speed or the vehicle speed signal is stopped. | | |
| Warning Method | Combination Meter Assembly | Buzzer | Sounds once |
| | | Smart Warning Indicator | Blinks (yellow) |
| | Wireless Door Lock Buzzer | | - |
| Warning Stop Condition | The warning is stopped when one of the following conditions is met:<br>• Approx. 15 seconds have elapsed from the time the warning started.<br>• The steering lock actuator assembly malfunction has been resolved.<br>• A failure of the lock/unlock detection switch in the steering lock actuator assembly has been resolved. | | |

(13) In situation L

The driver uses a mechanical key to open the door and presses the engine switch, but no electrical key transmitter sub-assembly is detected in the vehicle interior. Or, the driver presses the engine switch, but no electrical key transmitter sub-assembly is detected 2 consecutive times in the vehicle interior. In these situations, the following control is performed:

| | | | |
|---|---|---|---|
| Possible Effects without Warning | Usability function | | |
| Warning Condition | Any of the following conditions is satisfied at the time the engine switch is pressed:<br>• Immobiliser function is set.<br>• No electrical key transmitter sub-assembly is detected in the vehicle interior.<br>• Unlocking with a mechanical key or operating the engine switch has resulted in a certification failure 2 consecutive times. | | |
| Warning Method | Combination Meter Assembly | Buzzer | Sounds once |
| | | Smart Warning Indicator | Blinks (yellow) |

| | | |
|---|---|---|
| | Wireless Door Lock Buzzer | - |
| Warning Stop Condition | The warning is stopped when one of the following conditions is met:<br>• Approx. 30 seconds have elapsed from the time the warning started.<br>• An electrical key transmitter sub-assembly is detected in the vehicle interior. | |

(14) In situation M

If the shift lever is in a position in which the engine cannot be started, the display will show a shift lever position in which the engine can be started:

| | | | |
|---|---|---|---|
| Possible Effects without Warning | Usability function | | |
| Warning Condition | The warning is started when all the following conditions are satisfied:<br>• Shift lever is in any position other than P or N.<br>• Engine is stopped (starter is not cranking).<br>• Vehicle speed is 0 km/h (0 mph).<br>• After the power source mode has turned on (IG), more than 0.5 seconds have elapsed. | | |
| Warning Method | Combination Meter Assembly | Buzzer | Sounds once |
| | | Smart Warning Indicator | - |
| | Wireless Door Lock Buzzer | | - |
| Warning Stop Condition | The warning is stopped when one of the following conditions is met:<br>• Power source mode turns to anything other than on (IG).<br>• Engine is started.<br>• Vehicle speed is more than 5 km/h (3 mph).<br>• Shift lever is moved to P or N. | | |

(15) In situation N

There are 2 patterns for situation N.

Pattern 1:

A warning message appears on the multi-information display when the driver attempts to turn the engine switch off with the shift lever in any position other than P or N.

| | | | |
|---|---|---|---|
| Possible Effects without Warning | Battery discharge, vehicle roll-away | | |
| Warning Condition | After the power source mode is turned from on (IG) to off with the shift lever in P or N, the power source mode is turned on (ACC). | | |
| Warning Method | Combination Meter Assembly | Buzzer | Sounds continuously |
| | | Smart Warning Indicator | - |
| | Wireless Door Lock Buzzer | | - |
| Warning Stop | The warning is stopped when one of the following conditions is met: | | |

| | |
|---|---|
| Condition | • Shift lever is moved to P.<br>• Power source mode turns to anything other than on (ACC). |

Pattern 2:

The shift lever is moved to P from the Pattern 1 situation.

| | | | |
|---|---|---|---|
| Possible Effects without Warning | Battery discharge, vehicle roll-away | | |
| Warning Condition | After the power source mode is turned off with the shift lever in any position except P, the shift lever is moved to P. | | |
| Warning Method | Combination Meter Assembly | Buzzer | Sounds once |
| | | Smart Warning Indicator | - |
| | Wireless Door Lock Buzzer | | - |
| Warning Stop Condition | The warning is stopped when one of the following conditions is met:<br>• Power source mode is turned to anything other than on (ACC).<br>• Shift lever is in any position other than P. | | |

(16) In situation O

An automatic power off operation is detected. In this situation, the following control is performed:

| | | | |
|---|---|---|---|
| Possible Effects without Warning | Usability function | | |
| Warning Condition | The warning is started when all the following conditions are satisfied:<br>• Shift lever position is in P.<br>• The power source mode is turned off by the automatic power off operation after the power source mode has been on (ACC) or on (IG) with the engine stopped and with the vehicle speed at 0 km/h (0 mph) for a certain amount of time. | | |
| Warning Method | Combination Meter Assembly | Buzzer | - |
| | | Smart Warning Indicator | - |
| | Wireless Door Lock Buzzer | | - |
| Warning Stop Condition | The warning is stopped when one of the following conditions is met:<br>• Approx. 10 seconds have elapsed from the time the warning started.<br>• Power source mode is turned to anything other than off. | | |

(17) In situation P

The buzzer built into the combination meter assembly sounds when an electrical key transmitter sub-assembly with a depleted battery is touched to the engine switch while depressing the brake. In this situation, the following control is performed:

| | |
|---|---|
| Possible Effects without Warning | Usability function |

| | | | |
|---|---|---|---|
| Warning | | | |
| Warning Condition | Key certification result is OK. | | |
| Warning Method | Combination Meter Assembly | Buzzer | Sounds once |
| | | Smart Warning Indicator | - |
| | Wireless Door Lock Buzzer | | - |
| Warning Stop Condition | The warning is stopped when one of the following conditions is met:<br>• Approx. 10 seconds have elapsed from the time the warning started.<br>• An electrical key transmitter sub-assembly is detected in the vehicle interior.<br>• Engine speed is 500 rpm or more.<br>• Driving is possible.<br>• The immobiliser function is set and the smart ignition matching check is stopped or incompatible. | | |

(i) Battery Saving Function

(1) Battery saving preserves the vehicle and electrical key transmitter sub-assembly batteries. The battery saving function is activated when the vehicle remains parked for a long time and when the electrical key transmitter sub-assembly is left in the exterior actuation area.

| CONDITION | CONDITION | OUTLINE |
|---|---|---|
| When the vehicle remains parked for a long time. | Condition 1:<br>No response from the electrical key transmitter sub-assembly for more than 5 days.<br>• Door electrical key antennas and outside electrical key antenna stop emitting signals for creating the actuation area. In addition, the lock sensors or unlock sensors of all the seats are available, so touching the sensor can lock or unlock. | When the engine switch is turned on (IG), the control is canceled and the system is returned to normal. |
| | Condition 2:<br>No response from the electrical key transmitter sub-assembly for more than 14 days.<br>• Door electrical key antennas and outside electrical key antenna stop emitting signals for creating the actuation area.<br>• The lock sensors and unlock sensors except for the driver door are disabled. | When the engine switch is turned on (IG), the control is canceled and the system is returned to normal. When one of the following conditions is met, the control is returned to condition 1:<br>• The doors are locked or unlocked using the wireless door lock control function.<br>• A door is locked or unlocked using the mechanical key.<br>• Door is opened to closed. |
| When the electrical key transmitter sub- | This state continues longer than 10 minutes.<br>• Electrical key antenna that is detecting the electrical key transmitter sub- | The control is stopped when one of the following conditions is met:<br>• The doors are locked or unlocked using the wireless door lock control function. |

| | | |
|---|---|---|
| assembly is left in the exterior actuation area. | the electrical key transmitter sub-assembly stops emitting signals for creating the actuation area. | • The doors are locked or unlocked by touching the lock/unlock sensor.<br>• A door is locked or unlocked using the mechanical key. |

(2) In addition to the above functions, the auto power off function helps to reduce drain on the vehicle auxiliary battery by turning the power source mode to off (a) when approximately 20 minutes have elapsed since the shift lever was moved to P with the power source mode on (ACC) or (b) when approximately 60 minutes have elapsed since the engine was turned off with the shift lever in P, the power source mode on (IG) and the vehicle stationary.

(j) Battery Saving Function of Electrical Key Transmitter Sub-assembly

(1) This function cancels the signal reception waiting state of the electrical key transmitter sub-assembly, reducing the consumption of current from its battery.

(2) The electrical key transmitter sub-assembly can be placed into and taken out of battery saving mode. When the electrical key transmitter sub-assembly is in battery saving mode, the smart key system will not be able to detect the electrical key transmitter sub-assembly, as the electrical key transmitter sub-assembly will not respond to signals from the vehicle. The smart key system will not operate if the electrical key transmitter sub-assembly is in battery saving mode.

(3) Pressing the unlock button of the electrical key transmitter sub-assembly twice while pressing the lock button (the indicator light of the electrical key transmitter sub-assembly blinks 4 times) selects battery saving mode for the electrical key transmitter sub-assembly.

(4) Battery saving mode can be canceled by pressing any button on the electrical key transmitter sub-assembly.

(k) Key Cancel Function

(1) The following system functions can be deactivated by using the key cancel procedure:

- Entry Lock
- Entry Unlock
- Prevention of Key Confinement
- Warning

(2) The system functions can be deactivated by using the following key cancel procedure when the engine switch is off and the driver door is closed and unlocked:

| | |
|---|---|
| Key Cancel Procedure | The procedure is as follows:<br>◦ Press the unlock button of the electrical key transmitter sub-assembly once.<br>◦ Within 5 seconds of the step above, open the driver door (driver door: close → open).<br>◦ Within 5 seconds of the step above, press the unlock button of the electrical key transmitter sub-assembly twice.<br>◦ Repeat close → open for the driver door twice* (driver door: open → close → open → close → open).<br>◦ Press the unlock button of the electrical key transmitter sub-assembly twice.*<br>◦ Repeat close → open for the driver door once* (driver door: open → close → open).<br>◦ Within 5 seconds of the step above, close the driver door.<br>When the cancel procedure is complete, the buzzer sounds twice. Meanwhile, when the procedure is performed again to resume the system, the buzzer sounds once. |

| | |
|---|---|
| | |

**HINT:**

*: All these 3 steps are performed within 30 seconds of the previous step.

(l) Key Code Registration Function

(1) The table below shows the 4 special ID code registration function modes through which up to 7 different codes can be registered. The codes are electronically registered (written and stored) in the EEPROM. For details, refer to the Service Bulletin.

| MODE | FUNCTION |
|---|---|
| Rewrite | Clears all previously registered codes and registers only the newly received codes. This mode is used whenever an electrical key transmitter sub-assembly or the certification ECU is replaced. |
| Add | Adds a newly received code while preserving previously registered codes. This mode is used when adding a new electrical key transmitter sub-assembly. |
| Confirm | Confirms how many codes are currently registered. When adding a new code, this mode is used to check how many codes already exist. |
| Prohibit | Clears all registered codes and prohibits the wireless door lock function. This mode is used when a key is lost. |

## 4. DIAGNOSIS

(a) The certification ECU can detect malfunctions in the smart key system when the power source is on (IG).

(b) When the ECU detects a malfunction, the smart warning indicator blinks in yellow to warn the driver. At the same time, the ECU stores a 5-digit Diagnostic Trouble Code (DTC) in its memory.

(c) The indicator light warning continues for 15 seconds even after the engine switch is turned off.

(d) 5-digit DTCs can be read after connecting the Techstream to the DLC3.

(e) The smart key system may not operate successfully if a malfunction occurs.