| | | |
|---|---|---|
| **Last Modified:** 03-12-2013 | 6.4 F | **Doc ID:** NM1000000004HD3 |
| **Model Year:** 2013 | **Model:** RAV4 | **Prod Date Range:** [12/2012 - ] |
| **Title:** 2AR-FE ENGINE MECHANICAL: ENGINE UNIT: CRANKSHAFT AND BEARING; 2013 MY RAV4 [12/2012 - ] | | |

# CRANKSHAFT AND BEARING

## 1. CONSTRUCTION

(a) The crankshaft is made of micro-alloyed steel. It has 5 journals and 8 balance weights.

(b) A balance shaft drive gear is provided for the crankshaft.

(c) The lining surface of the crankshaft bearing has been micro-grooved to achieve an optimal amount of oil clearance. As a result, cold-engine cranking performance has been improved and engine vibrations have been reduced.

(d) The oil groove on the crankshaft bearing is made eccentric to reduce the amount of oil leakage from the bearing. This enables the capacity of the oil pump to be reduced in order to achieve a low friction operation.

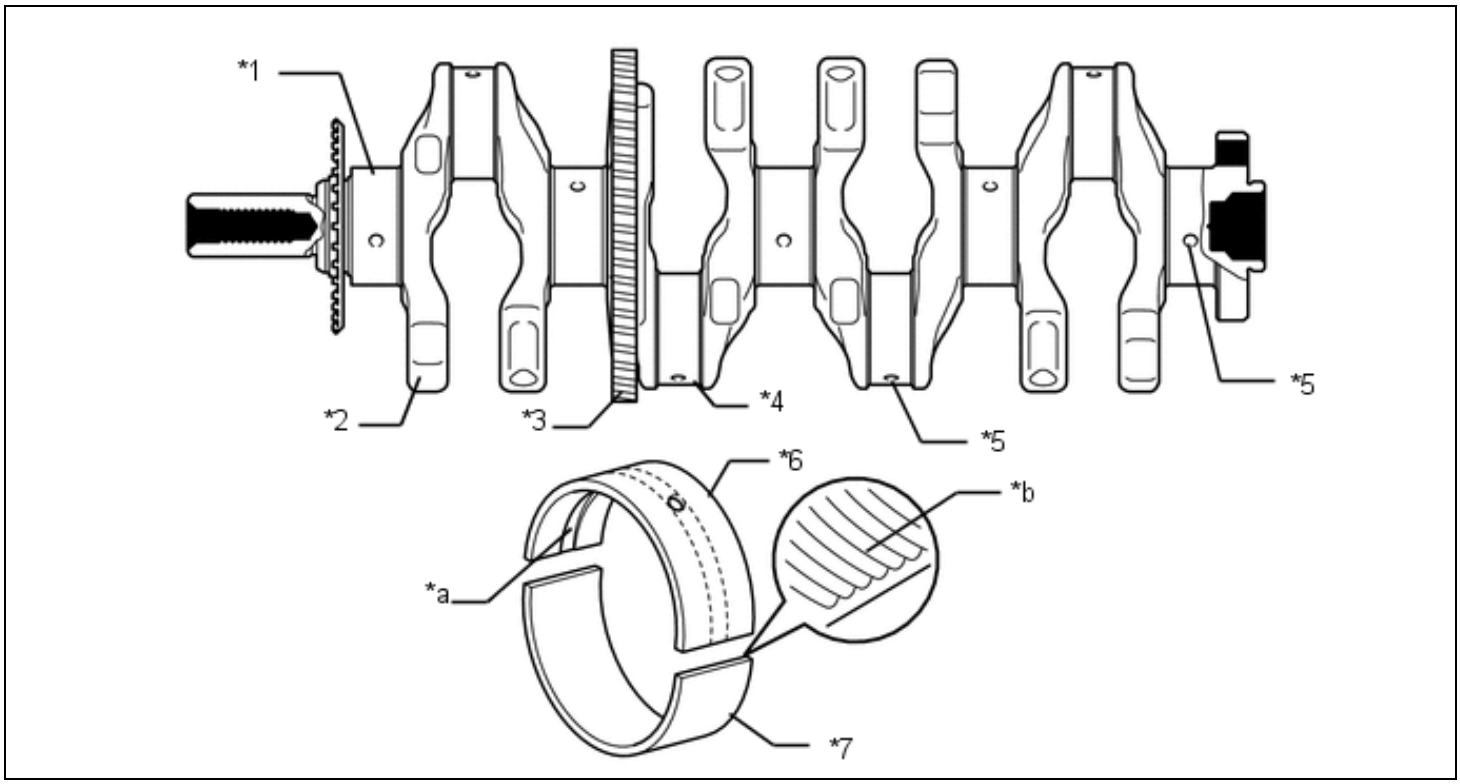


| | | | |
|---|---|---|---|
| *1 | No. 1 Journal | *2 | Balance Weight |
| *3 | Balance Shaft Drive Gear | *4 | Crank Pin |
| *5 | Oil Hole | *6 | Upper Main Bearing |
| *7 | Lower Main Bearing | - | - |
| *a | Oil Groove | *b | Micro-grooved |