| | | |
|---|---|---|
| **Last Modified:** 03-12-2013 | 6.4 F | **Doc ID:** NM1000000004HCP |
| **Model Year:** 2013 | **Model:** RAV4 | **Prod Date Range:** [12/2012 - ] |
| **Title:** 2AR-FE ENGINE MECHANICAL: ENGINE UNIT: CYLINDER HEAD; 2013 MY RAV4 [12/2012 - ] | | |

# CYLINDER HEAD

## 1. CONSTRUCTION

(a) The cylinder head structure has been simplified by separating the camshaft housing (cam journal portion) from the cylinder head.

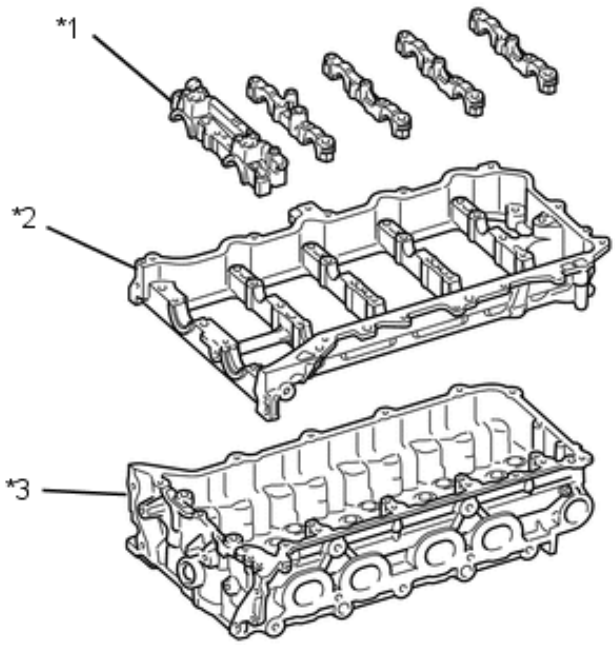


| | | | |
|---|---|---|---|
| *1 | Camshaft Bearing Cap | *2 | Camshaft Housing |
| *3 | Cylinder Head | - | - |

(b) The cylinder head, which is made of aluminum, contains a pentroof-type combustion chamber. The spark plug is located in the center of the combustion chamber in order to improve the engine's anti-knocking performance.

(c) A taper squish combustion chamber is used to improve anti-knocking performance. In addition, engine performance and fuel economy have been improved.

(d) Long nozzle type fuel injectors are installed in the cylinder head to reduce the distance from injector to intake valve, thus preventing the fuel from adhering to the intake port walls, and reducing HC exhaust emissions.

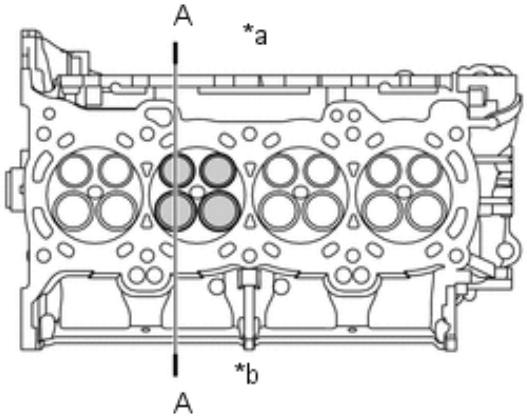


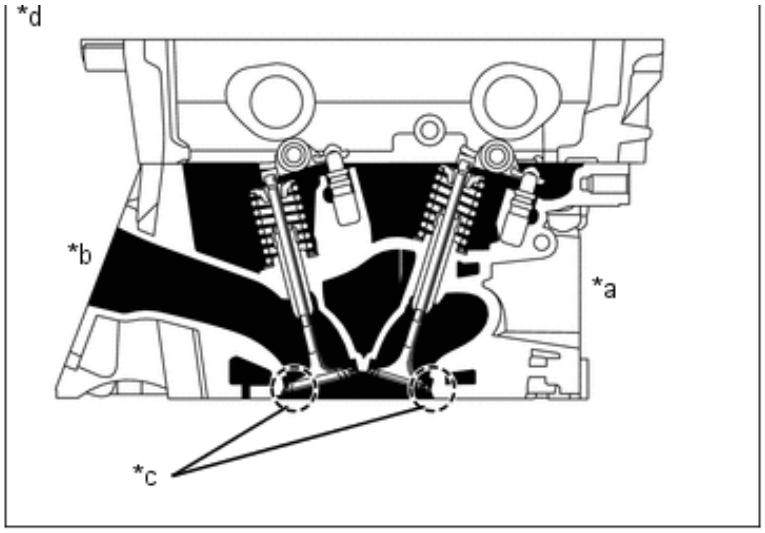


| | | | |
|---|---|---|---|
| *a | Exhaust Side | *b | Intake Side |
| *c | Taper Squish | *d | A - A Cross Section |