| | | |
|---|---|---|
| **Last Modified:** 03-12-2013 | 6.4 F | **Doc ID:** NM1000000005PUE |
| **Model Year:** 2013 | **Model:** RAV4 | **Prod Date Range:** [12/2012 - ] |
| **Title:** TIRE PRESSURE MONITORING: TIRE PRESSURE WARNING SYSTEM: PARTS LOCATION; 2013 MY RAV4 [12/2012 - ] | | |

# PARTS LOCATION

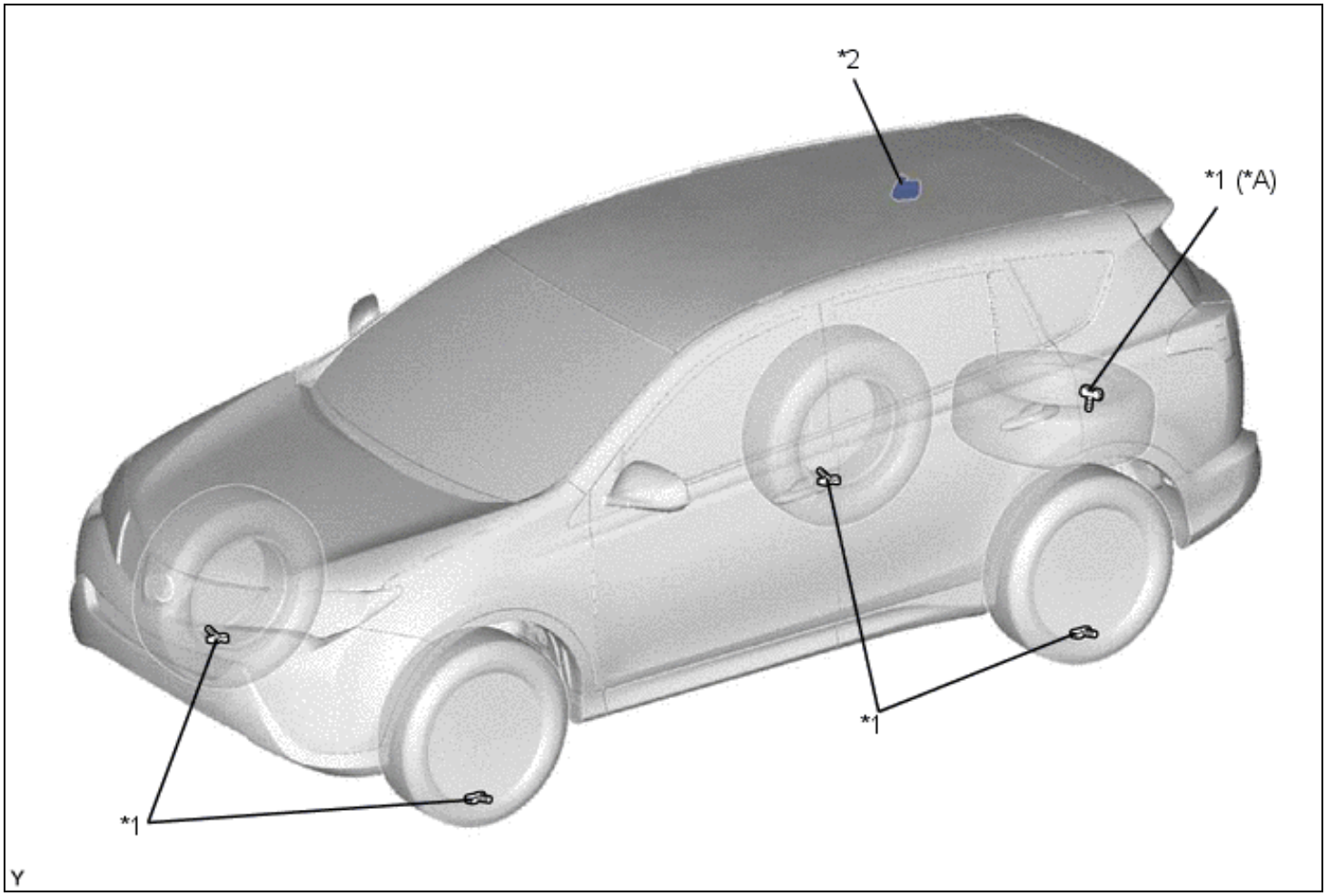


| | | | |
|---|---|---|---|
| *A | Models with Full Size Spare Tire | - | - |
| *1 | Tire Pressure Warning Valve and Transmitter | *2 | Tire Pressure Warning ECU and Receiver |

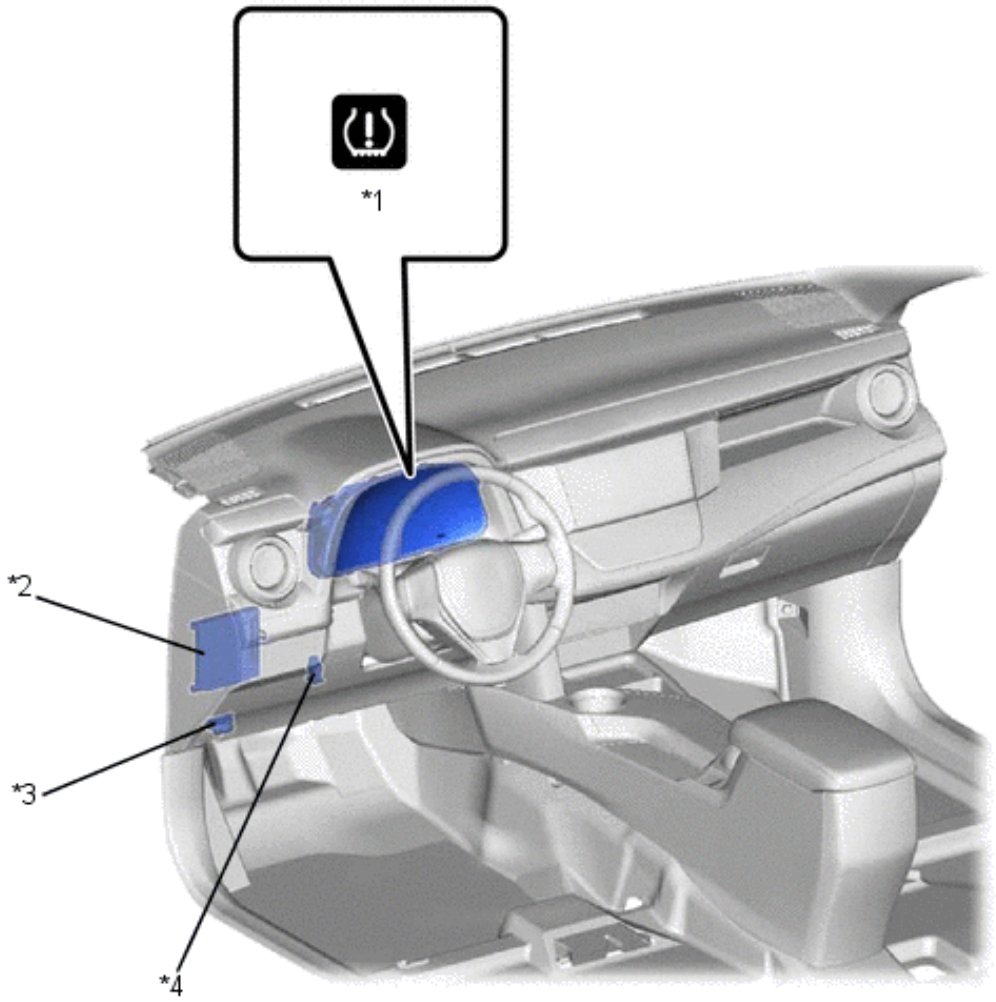


Y

| | | | |
|---|---|---|---|
| *1 | Tire Pressure Warning Light | *2 | Main Body ECU (Multiplex Network Body ECU) |
| *3 | DLC3 | *4 | Tire Pressure Warning Reset Switch |