| | | |
|---|---|---|
| **Last Modified:** 03-12-2013 | 6.4 F | **Doc ID:** NM1000000005FZ7 |
| **Model Year:** 2013 | **Model:** RAV4 | **Prod Date Range:** [12/2012 - ] |
| **Title:** MIRROR (EXT): MIRROR SYSTEM: PARTS LOCATION; 2013 MY RAV4 [12/2012 - ] | | |

# PARTS LOCATION

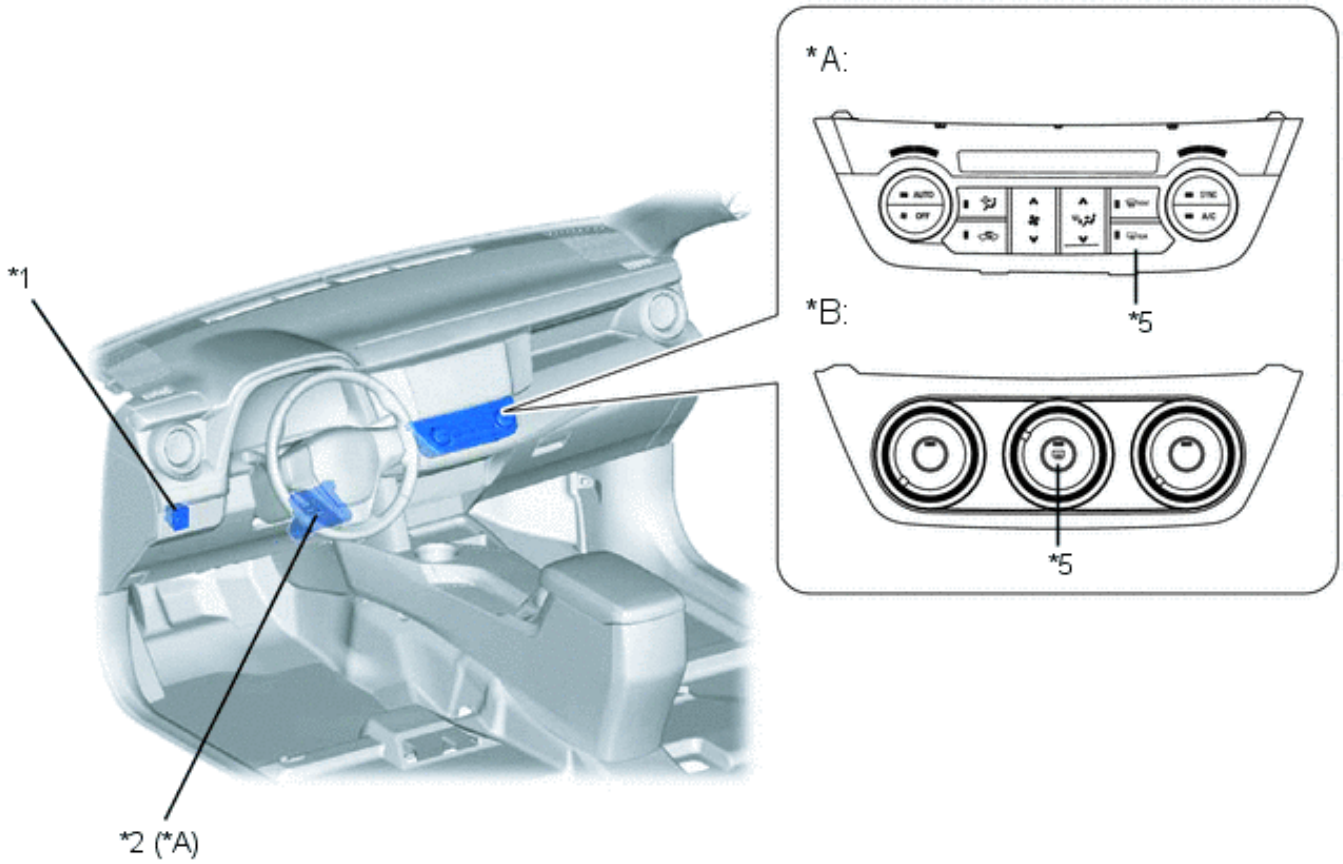


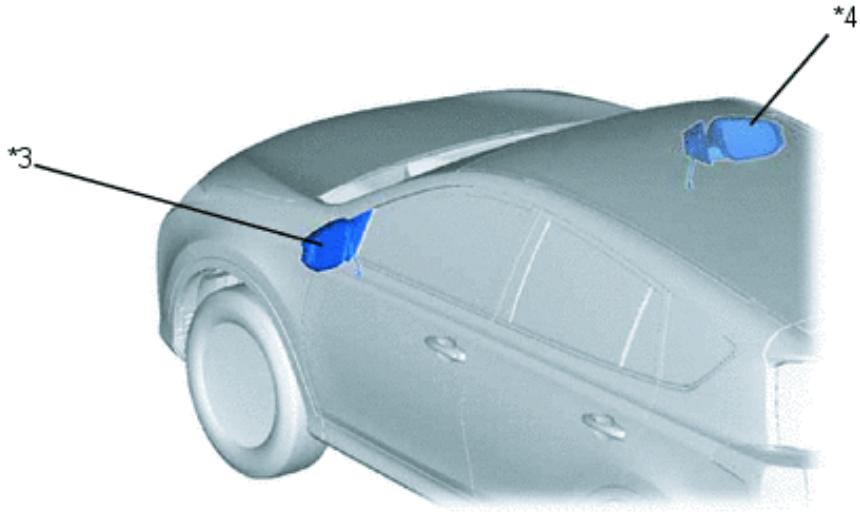


| | | | |
|---|---|---|---|
| *A | Models with Automatic Air Conditioning System | *B | Models with Manual Air Conditioning System |
| *1 | Outer Mirror Switch Assembly | *2 | Air Conditioning Amplifier Assembly |

| | | | |
|---|---|---|---|
| *3 | Outer Rear View Mirror Assembly LH | *4 | Outer Rear View Mirror Assembly RH |
| *5 | Rear Window Defogger Switch | - | - |