| | | |
|---|---|---|
| **Last Modified:** 03-12-2013 | 6.4 F | **Doc ID:** NM1000000004IEN |
| **Model Year:** 2013 | **Model:** RAV4 | **Prod Date Range:** [12/2012 - ] |
| **Title:** SUPPLEMENTAL RESTRAINT SYSTEMS: OCCUPANT CLASSIFICATION SYSTEM: OCCUPANT CLASSIFICATION CONTROL; 2013 MY RAV4 [12/2012 - ] | | |

# OCCUPANT CLASSIFICATION CONTROL

## 1. FUNCTION OF MAIN COMPONENTS

(a) The main components in the occupant detection system have the following functions:

| COMPONENT | | FUNCTION |
|---|---|---|
| Occupant Detection ECU | | The occupant detection ECU judges whether the front passenger seat is occupied based on signals from the 2 occupant detection sensors and the front seat inner belt assembly RH. |
| Occupant Detection Sensor | | The output values of this sensor, which vary in accordance with the distortion that acts on the brackets, are output to the occupant detection ECU. |
| Front Seat Inner Belt Assembly RH | | The front seat inner belt assembly RH detects whether or not the front passenger seat belt is fastened. |
| Combination Meter Assembly | SRS Warning Light | The SRS warning light turns on to alert the driver when the center airbag sensor assembly detects a malfunction in the airbag system. |
| Telltale Light Assembly | AIRBAG ON/OFF Indicator Light | • Inform the driver whether the occupant detection ECU puts the instrument panel passenger airbag without door assembly and front seat outer belt assembly RH into an active state or inactive state.<br>• If a malfunction occurs in the occupant classification system, the AIRBAG OFF indicator light and the SRS warning light come on. |

## 2. OPERATIONG CONDITION

(a) The front passenger SRS components and indicator lights operate as follows according to the occupant classification.

| ITEM | OCCUPANT CLASSIFICATION | | | | |
|---|---|---|---|---|---|
| | ADULT | CHILD | CHILD SEAT | UNOCCUPIED | MALFUNCTION |
| SRS Front Passenger Airbag (Instrument Panel Passenger Airbag without Door Assembly) | ○ | - | - | - | - |
| SRS Seat Cushion Airbag RH (Front Seat Cushion Airbag Assembly RH)*1 | ○*2 | - | - | - | - |
| SRS Front Side Airbag RH (Front Seat Airbag Assembly RH) | ○ | ○ | ○ | ○ | ○ |
| Front Seat Outer Belt Assembly RH | ○ | ○ | ○ | ○ | ○ |
| AIRBAG ON Indicator Light | On | Off | Off | Off | Off |

| | | | | | |
|---|---|---|---|---|---|
| AIRBAG OFF Indicator Light | Off | On | On | On | On |

**HINT:**

○ : Enabled

- : Disabled

*1: Models with SRS seat cushion airbag

*2: Not be deployed when the front passenger seat belt has been unfastened.

## 3. SYSTEM CONTROL

(a) In the occupant classification system, the occupant detection ECU calculates the weight of the occupant based on signals from the occupant detection sensors.

(b) This system recognizes the occupant as a child if it detects a weight of less than criteria value "B", and disables the SRS front passenger air bag (instrument panel passenger without door airbag assembly) and SRS seat cushion airbag RH (front seat cushion air bag assembly RH).

(c) The occupant detection ECU uses criteria value "A" to judge whether the seat is occupied by a child in accordance with the signals from the 2 occupant detection sensors and front seat inner belt assembly RH, and criteria value "B" to judge whether the occupant is an adult or child (with child seat).

(d) The occupant detection ECU judges that the seat is unoccupied when the judgment value is lower than criteria value "A" and the front seat inner belt assembly RH is off.

(e) If the ignition switch is turned to ON under the following conditions, the system performs an initial check and illuminates the AIRBAG OFF indicator light. Then, the system prohibits the deployment of the SRS front passenger airbag (instrument panel passenger without door airbag assembly) and SRS front seat cushion airbag RH (front seat cushion airbag assembly RH).

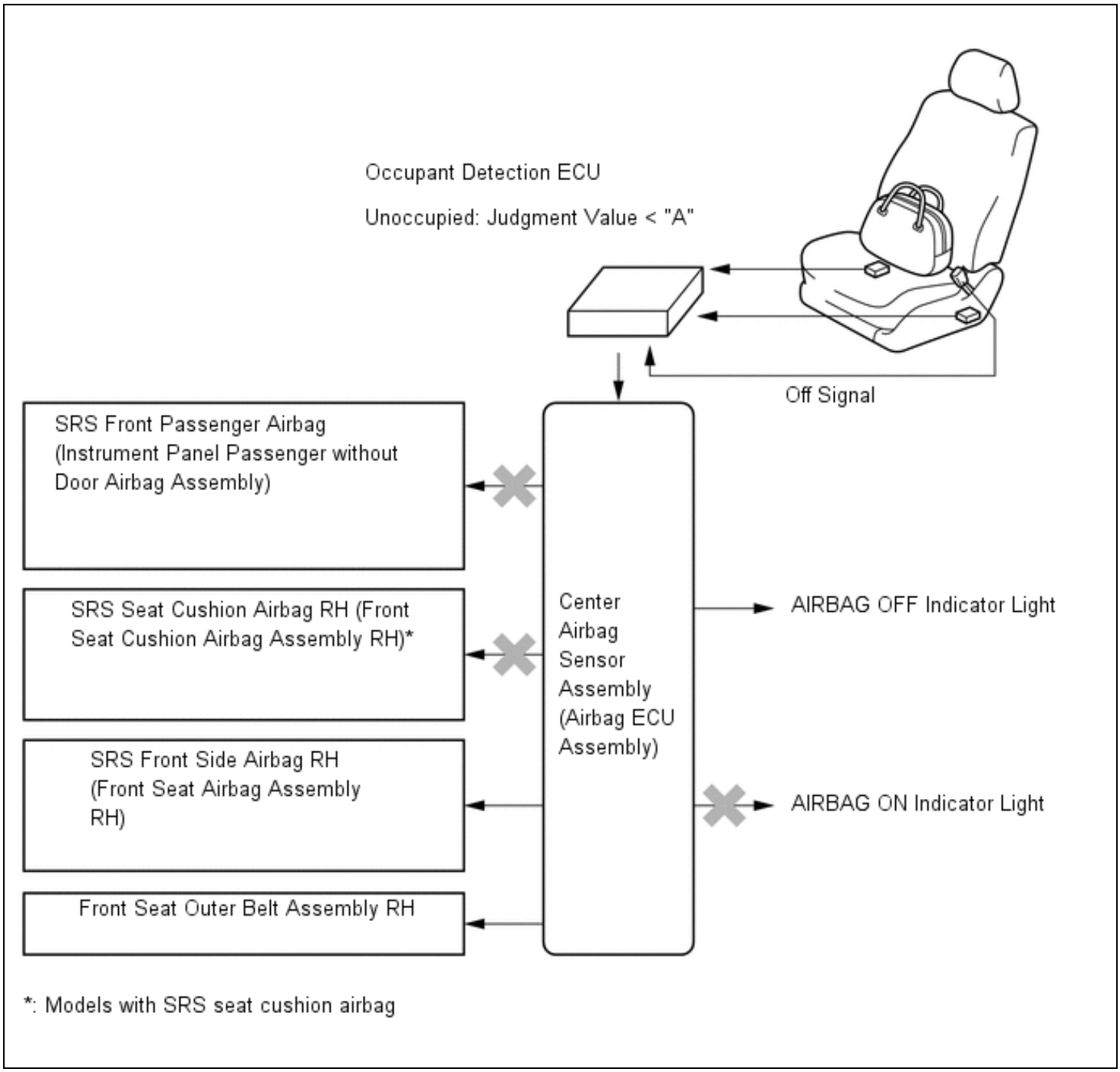


(f) If the judgment value is lower than criteria value "B" and the front seat inner belt assembly RH is on, the occupant detection ECU judges that a child seat is installed.

(g) If the judgment value is higher than criteria value "A", but lower than criteria value "B", and the front seat inner belt assembly RH is off, the occupant detection ECU judges that the seat is being occupied by a child.

(h) When the ignition switch is turned to ON under the following conditions, the system performs an initial check and illuminates the AIRBAG OFF indicator light to indicate that the SRS front passenger airbag (instrument panel passenger without door airbag assembly) and SRS front seat cushion airbag RH (front seat cushion airbag assembly) have been deactivated.

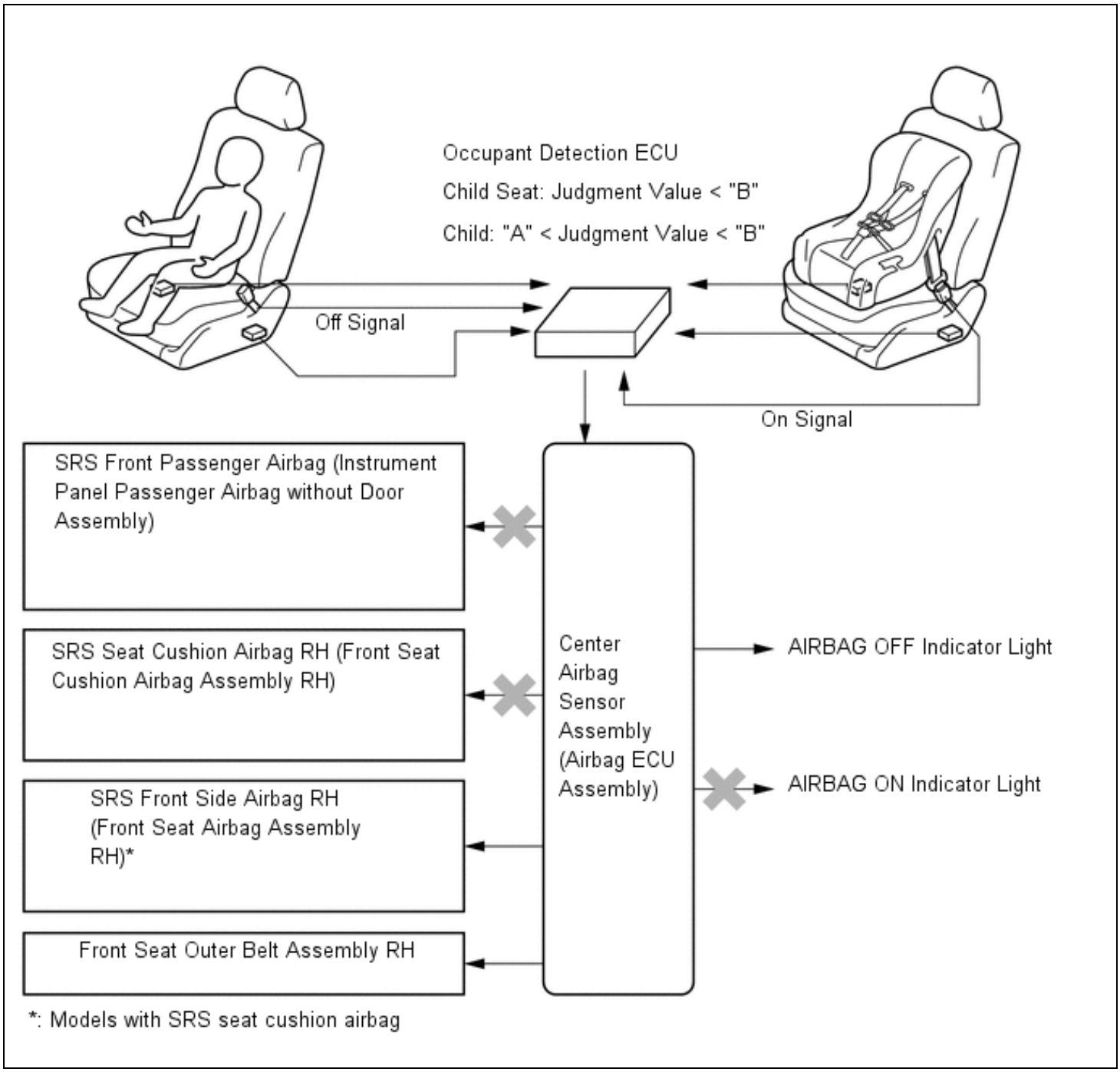


(i) When the judgment value is higher than criteria value "B", the occupant detection ECU judges that the seat is occupied by an adult.

(j) If the ignition switch is turned to ON in the following state, the system performs an initial check and illuminates the AIRBAG ON indicator light, indicating that the SRS front passenger airbag (instrument panel passenger without door airbag assembly), SRS front seat cushion airbag RH (front seat cushion airbag assembly RH), SRS front side airbag RH (front seat airbag assembly RH) and front seat outer belt assembly RH are active.

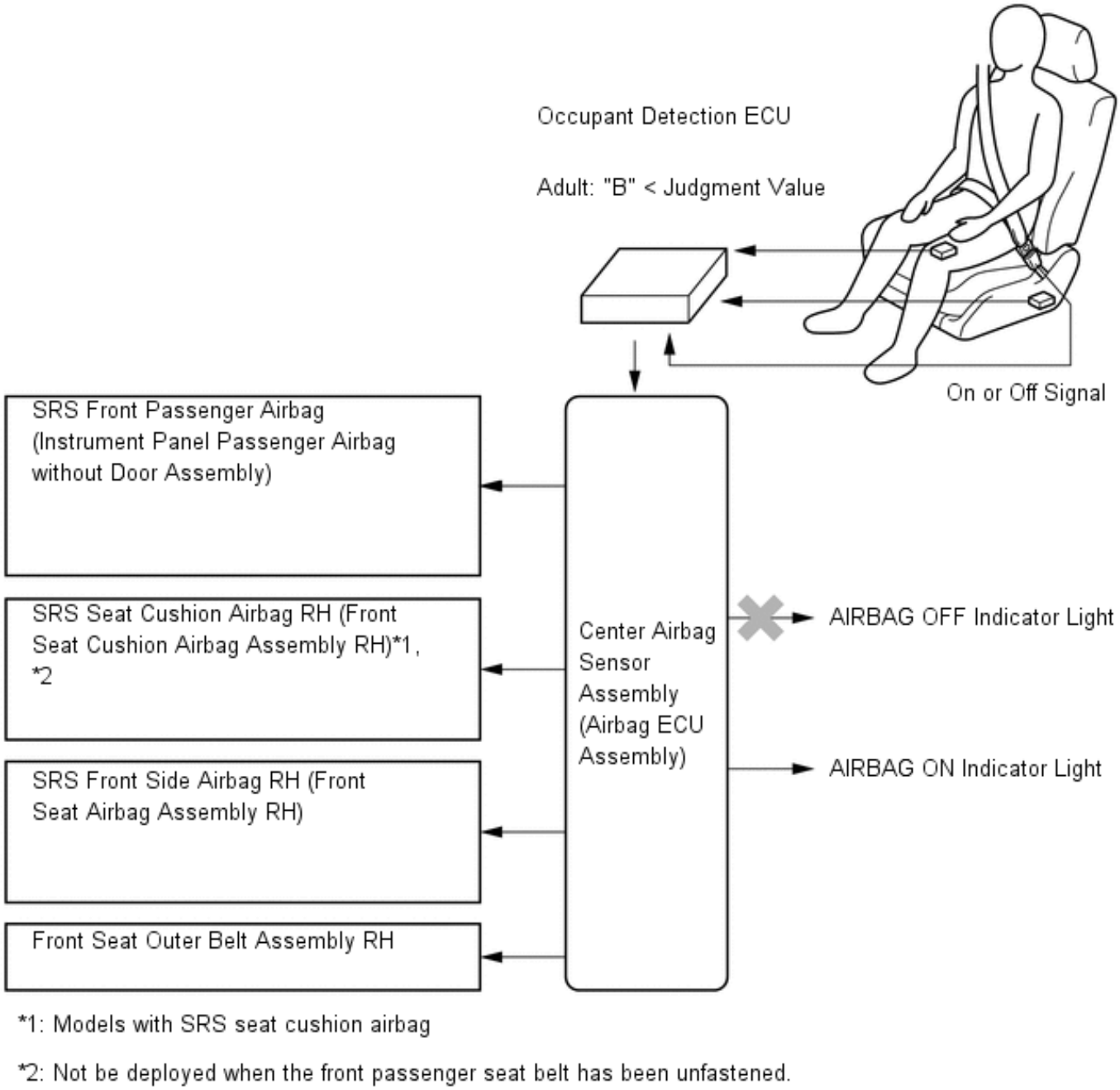


(k) After the ignition switch is turned to ON, the occupant detection ECU lights up the AIRBAG ON/OFF indicator lights via the center airbag sensor assembly based on the timing chart below in order to check the indicator light circuits:

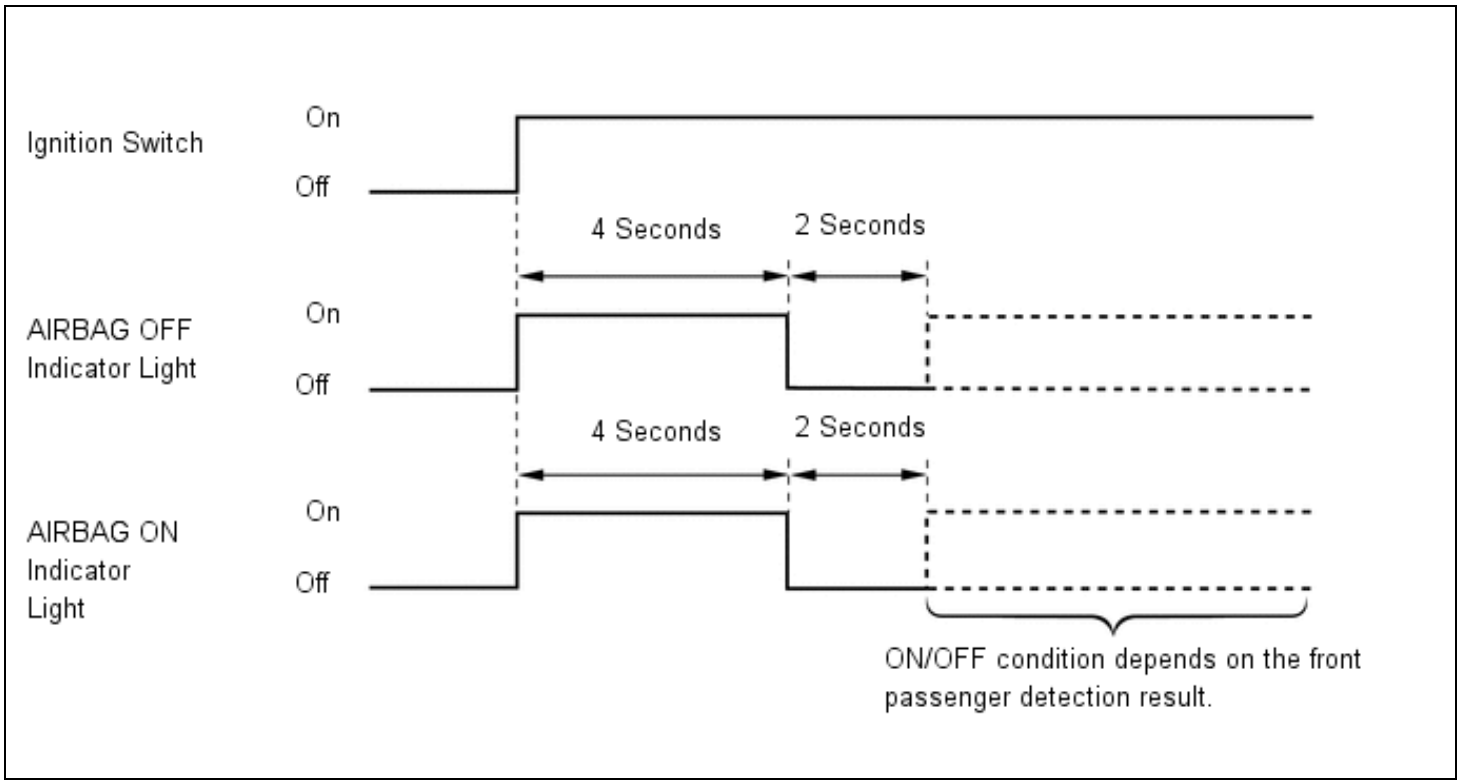


## 4. DIAGNOSIS

(a) If the occupant detection ECU detects a malfunction in the occupant classification system, the occupant detection ECU stores the malfunction data in memory. If the airbag sensor assembly detects a malfunction in the occupant detection ECU, the center airbag sensor assembly illuminates the SRS warning light and AIRBAG OFF indicator light.

(b) The occupant detection ECU outputs 5-digit Diagnostic Trouble Codes (DTCs) to the Techstream.

(c) The 5-digit DTCs can be read after connecting the Techstream to the DLC3. For details, refer to the Repair Manual.