| | | |
|---|---|---|
| **Last Modified:** 03-12-2013 | 6.4 F | **Doc ID:** NM1000000005H2S |
| **Model Year:** 2013 | **Model:** RAV4 | **Prod Date Range:** [12/2012 - ] |
| **Title:** PARK ASSIST / MONITORING: BLIND SPOT MONITOR SYSTEM: GENERAL; 2013 MY RAV4 [12/2012 - ] | | |

# GENERAL

## 1. OUTLINE

(a) The blind spot monitor system performs 2 functions using the same blind spot monitor sensors: blind spot monitor function and rear cross traffic alert function.

(b) The blind spot monitor function and rear cross traffic alert function can be enabled or disabled simultaneously using the blind spot monitor main switch (warning canceling switch assembly). It is not possible to enable or disable either of them independently.

(c) The blind spot monitor system consists of 2 blind spot monitor sensors, steering angle sensor, outer rear view mirror assemblies LH and RH, blind spot monitor main switch (warning canceling switch assembly), headlight dimmer switch assembly, rear cross traffic alert buzzer and combination meter assembly.

(d) The blind spot monitor function uses sensors to detect vehicles that are traveling in the vehicle's blind spot, helping the driver to confirm safety when changing lanes.

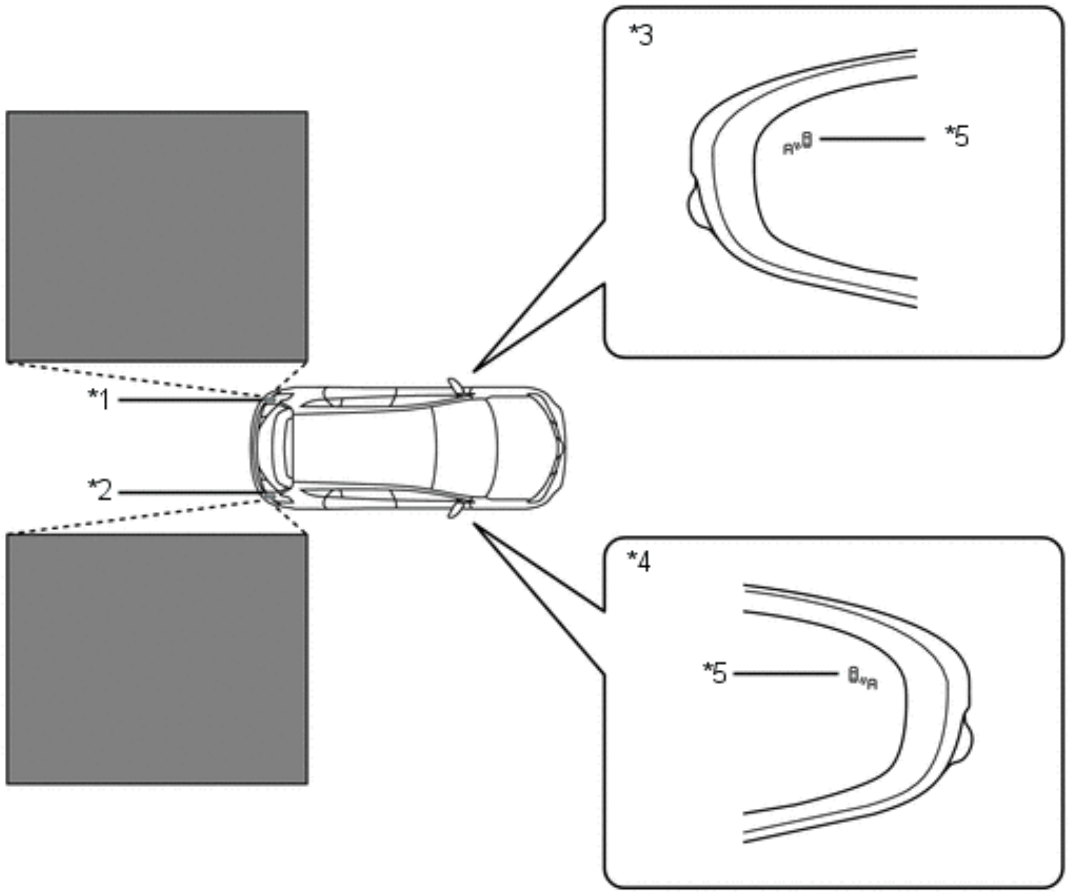


| | | | |
|---|---|---|---|
| *1 | Blind Spot Monitor Sensor LH | *2 | Blind Spot Monitor Sensor RH |
| *3 | Outer Rear View Mirror Assembly LH | *4 | Outer Rear View Mirror Assembly RH |
| *5 | Outer Rear View Mirror Indicator Light | - | - |
| | Detection Area | - | - |

(e) If the rear cross traffic alert function detects a vehicle in the rear side direction while the driver is reversing in a parking lot, the function alerts the driver by sounding the rear cross traffic alert buzzer and flashing the outer rear view mirror indicators light to provide information for the driver, supporting decision making.

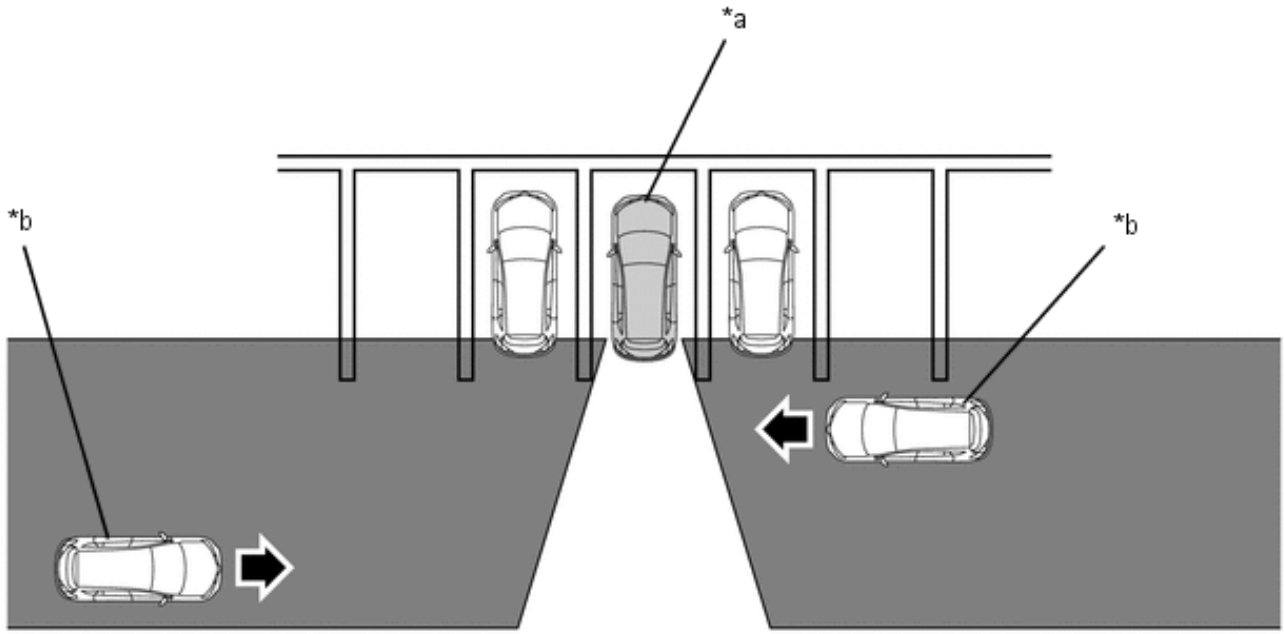


| *a | This Vehicle | *b | Target Vehicle |
|---|---|---|---|
| | Detection Area | - | - |

**2. PRECAUTION**

(a) The blind spot monitor may not detect vehicles correctly in the following conditions:

(1) During bad weather such as heavy rain, fog, snow, etc.

(2) When there is a significant difference in speed between this vehicle and the vehicle that enters the detection area.

(3) When a vehicle is in the detection area from a stop and remains in the detection area as this vehicle accelerates.

(4) When driving up or down steep inclines, such as hills, a dip in the road, etc.

(5) When multiple vehicles approach with only a small gap between each vehicle.

(6) When vehicle lanes are wide, and the vehicle in the next lane is too far away from this vehicle.

(7) When the vehicle that enters the detection area is traveling at about the same speed as this vehicle.

(8) When there is a significant difference in height between this vehicle and the vehicle that enters the detection area.

(9) When driving on a road surface that is wet due to rain, standing water, etc.

(10) When ice, mud, etc. is attached to the rear bumper.

(11) When towing anything such as trailer, boat, etc.

(12) When a carrier such as a bicycle holder, etc. is installed on the back of the vehicle.

(13) When the blind spot monitor sensor has been moved from its installation location by a light collision or an impact on the bumper.

(14) Directly after the blind spot monitor main switch assembly (warning canceling switch assembly) is turned on.

**HINT:**

In this section, the expression "this vehicle" is used to refer to the vehicle equipped with this blind spot monitor system.

(b) The blind spot monitor is not designed to detect the following types of vehicles or objects:

(1) Vehicles traveling from the opposite direction.

(2) Small motorcycles, bicycles, pedestrians, etc.*

(3) Following vehicles that are in the same lane.*

(4) Guardrails, walls, signs, parked vehicles and similar stationary objects.*

(5) Vehicles driving 2 lanes across from this vehicle.

**HINT:**

*: Depending on conditions, detection of a vehicle and/or object may occur.

(c) Instances of the blind spot monitor unnecessarily detecting a vehicle and/or object may increase under the following conditions:

(1) When there is only a short distance between this vehicle and a guardrail, wall, etc.

(2) When vehicle lanes are narrow and a vehicle driving 2 lanes across from this vehicle enters the detection area.

(3) When there is only a short distance between this vehicle and a following vehicle.

(d) One blind spot monitor sensor is installed inside the left and right sides of the vehicle rear bumper respectively. Observe the following to ensure that the blind spot monitor can function correctly.

(1) Keep the sensor and its surrounding area on the bumper clean at all times.

(2) Do not subject the surrounding area on the bumper to a strong impact. If the sensor moves even slightly off position, the system may malfunction and vehicles that enter the detection area may not be detected. If the surrounding area has been subjected to a strong impact, inspect the sensor and surrounding area.

(3) Do not disassemble the sensor.

(4) Do not attach accessories or stickers to the sensor or surrounding area on the bumper.

(5) Do not modify the sensor or surrounding area on the bumper.

(6) Do not paint the sensor or surrounding area.

(7) Do not apply strong impacts to the sensor or drop it, as it is a high-precision device.

(8) Do not reuse a sensor that has been dropped or subjected to a strong impact.

(e) The rear cross traffic alert function may not detect vehicles correctly in the following conditions:

(1) During bad weather such as heavy rain, fog, snow, etc.

(2) When a vehicle is approaching at high speed.

(3) When multiple vehicles approach continuously.

(4) When a parking on a steep incline, such as hills, a dip in the road etc.

(5) Vehicles that the sensors cannot detect because of obstacles.

(6) Shallow angle parking.

(7) When ice, mud, etc. is attached to the rear bumper.

(8) When towing anything such as trailer, boat, etc.

(9) When the blind spot monitor sensor has been moved from its installation location by a light collision or an impact on the bumper.

(10) Directly after the blind spot monitor main switch (warning canceling switch assembly) is turned on.

(f) The rear cross traffic alert function is not designed to detect the following types of vehicles or objects:

(1) Vehicles approaching from directly behind

(2) Small motorcycles, bicycles, pedestrians, etc.*

(3) Vehicles moving away from this vehicle*

(4) Guardrails, walls, signs, parked vehicles and similar stationary objects*

(5) Vehicles that enter the detection range from a parking space next to this vehicle*

**HINT:**

*: Depending on conditions, detection of a vehicle and/or object may occur.

In this section, the expression "this vehicle" is used to refer to the vehicle equipped with this blind spot monitor system.

(g) Ignition Switch Expressions

(1) The type of ignition switch used on this model differs depending on the specifications of the vehicle. The expressions listed in the table below are used in this section.

| EXPRESSION | IGNITION SWITCH (POSITION) | ENGINE SWITCH (CONDITION) |
|---|---|---|
| Ignition Switch off | LOCK | Off (Lock) |
| Ignition Switch ACC | ACC | On (ACC) |
| Ignition Switch ON | ON | On (IG) |
| Engine Start | START | On (Start) |