| | | |
|---|---|---|
| **Last Modified:** 03-12-2013 | 6.4 F | **Doc ID:** NM1000000005PU0 |
| **Model Year:** 2013 | **Model:** RAV4 | **Prod Date Range:** [12/2012 - ] |
| **Title:** FRONT SUSPENSION: FRONT SUSPENSION SYSTEM: SUSPENSION SUPPORT; 2013 MY RAV4 [12/2012 - ] | | |

# SUSPENSION SUPPORT

## 1. CONSTRUCTION

(a) Separate Input Construction Type

(1) A separate input construction type suspension upper support is used. This construction transmits only the inputs from the shock absorber assembly and the front spring bumper to the body via the suspension support sub-assembly. Thus, the suspension upper support achieves superior quietness and ride comfort performance.

- The input is transmitted from the front coil spring to the body via the strut mounting bearing.
- Because the front suspension support sub-assembly receives no input from the front coil spring, the rubber can be softened, thus achieving superior quietness and ride comfort.
- Through the use of urethane, the front spring bumper has been given a nonlinear stiffness characteristic (the bumper becomes progressively stiffer during operation), thus both ensuring rolling rigidity during steering and achieving ride comfort.

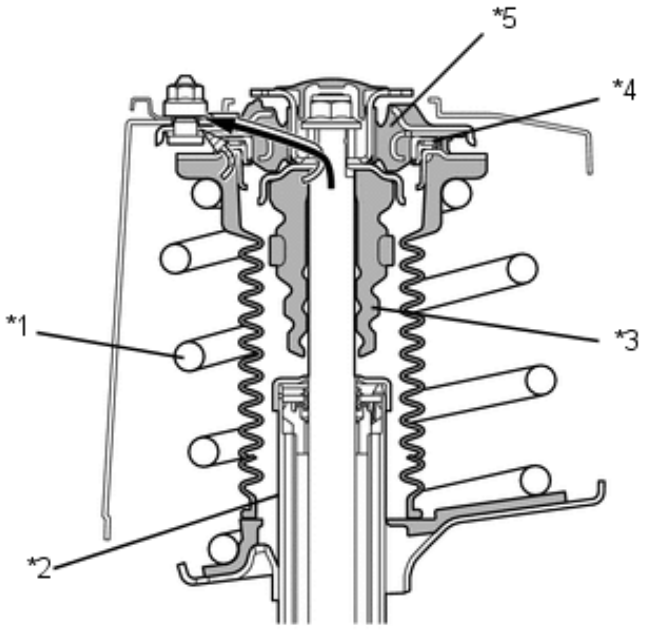


| | | | |
|---|---|---|---|
| *1 | Front Coil Spring | *2 | Front Shock Absorber Assembly |
| *3 | Front Spring Bumper | *4 | Strut Mounting Bearing |
| *5 | Front Suspension Support Sub-assembly | - | - |
| | Front Shock Absorber Assembly Input | | Front Spring Bumper Input |

| | | | |
|---|---|---|---|
| | | | |
| | Front Coil Spring Input | - | - |