| | | |
|---|---|---|
| **Last Modified:** 03-12-2013 | 6.4 F | **Doc ID:** NM1000000005Q73 |
| **Model Year:** 2013 | **Model:** RAV4 | **Prod Date Range:** [12/2012 - ] |
| **Title:** U760F AUTOMATIC TRANSMISSION / TRANSAXLE: AUTOMATIC TRANSAXLE SYSTEM: CLUTCH AND BRAKE PISTON; 2013 MY RAV4 [12/2012 - ] | | |

# CLUTCH AND BRAKE PISTON

## 1. CONSTRUCTION

(a) 2 types of pistons are used: a non-split piston that acts in the push direction for the No. 1 clutch (C1) operation, and a split piston that acts in the pull direction for the No. 2 clutch (C2) operation. These 2 types of pistons contribute to making the entire clutch structure compact.

(b) A split type piston is used for the C2 piston, achieving a compact design.

(c) A wave spring is used to ensure C2 piston transfer efficiency.

(d) By setting the piston for the No. 3 brake (B3) operation around the counter drive gear, the brake structure has been made more compact.

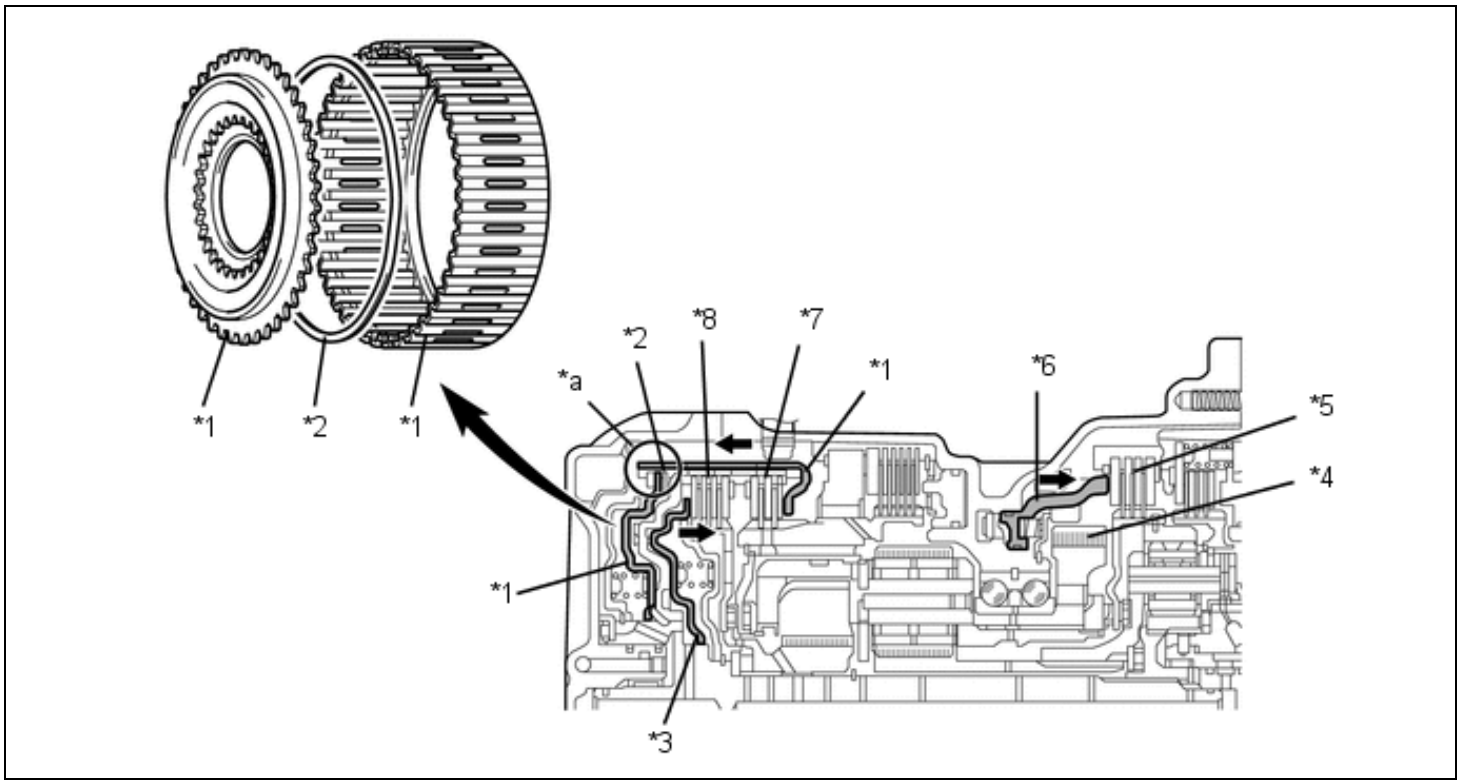


| | | | |
|---|---|---|---|
| *1 | Piston (Split Type) | *2 | Wave Spring |
| *3 | Piston (Non-split Type) | *4 | Counter Drive Gear |
| *5 | No. 3 Brake (B3) | *6 | Piston |
| *7 | No. 2 Clutch (C2) | *8 | No. 1 Clutch (C1) |
| *a | Point of Separation | - | - |