| | | |
|---|---|---|
| **Last Modified:** 03-12-2013 | 6.4 F | **Doc ID:** NM1000000005II2 |
| **Model Year:** 2013 | **Model:** RAV4 | **Prod Date Range:** [12/2012 - ] |
| **Title:** LIGHTING (EXT): LIGHTING SYSTEM: PARTS LOCATION; 2013 MY RAV4 [12/2012 - ] | | |

# PARTS LOCATION

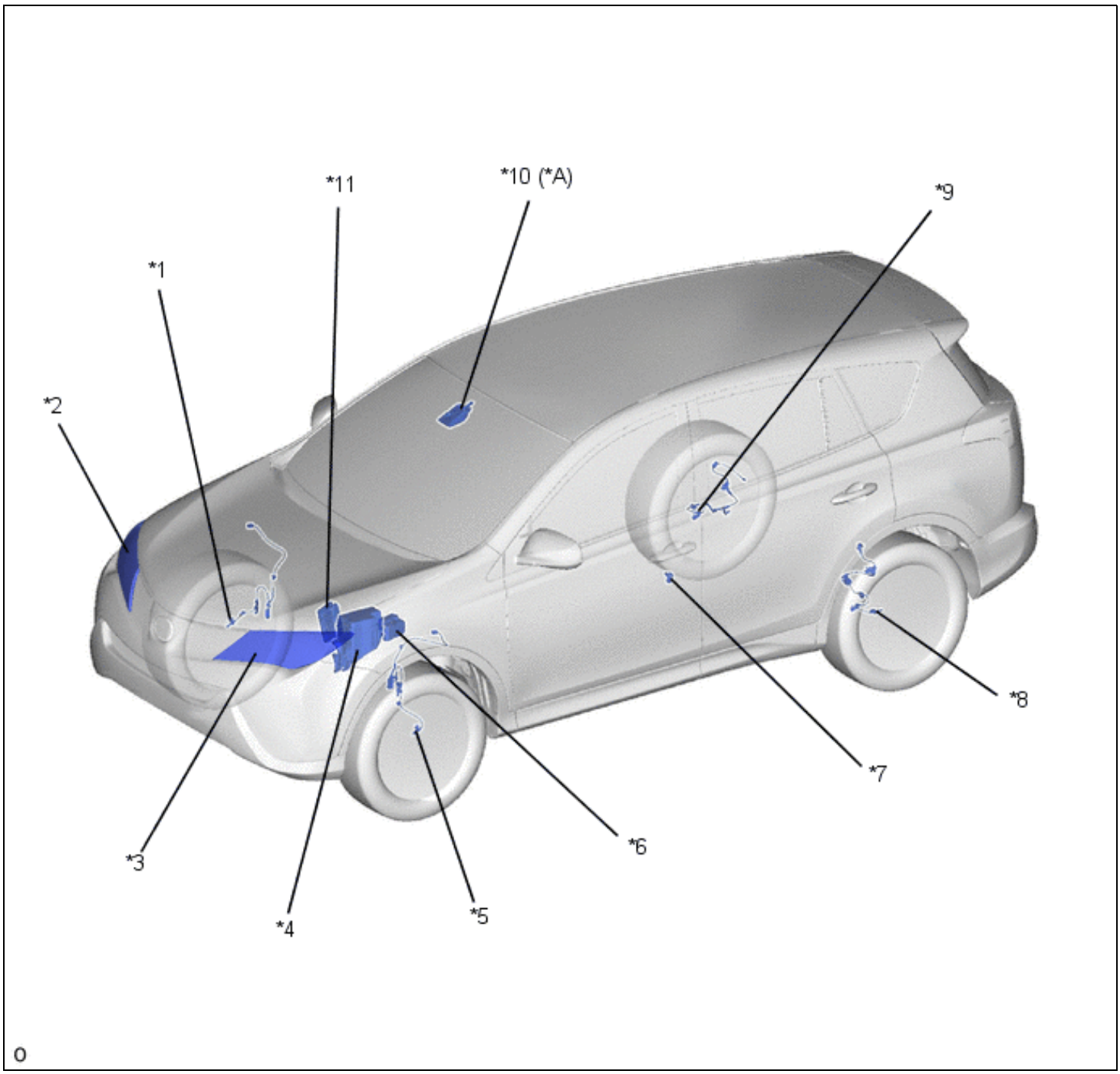


| | | | |
|---|---|---|---|
| *A | Models with Automatic High Beam (AHB) System | - | - |
| *1 | Front Speed Sensor RH | *2 | Headlight Assembly RH |
| *3 | Headlight Assembly LH | *4 | Engine Room Relay Block<br>• Daytime Running Light |

| | | | |
|---|---|---|---|
| | | | Module |
| *5 | Front Speed Sensor LH | *6 | Brake Actuator Assembly<br>• Skid Control ECU |
| *7 | Front Door Courtesy Light Switch LH | *8 | Rear Speed Sensor LH |
| *9 | Rear Speed Sensor RH | *10 | Automatic High Beam (AHB) Sensor (Lane Departure Warning Camera) |
| *11 | ECM | - | - |

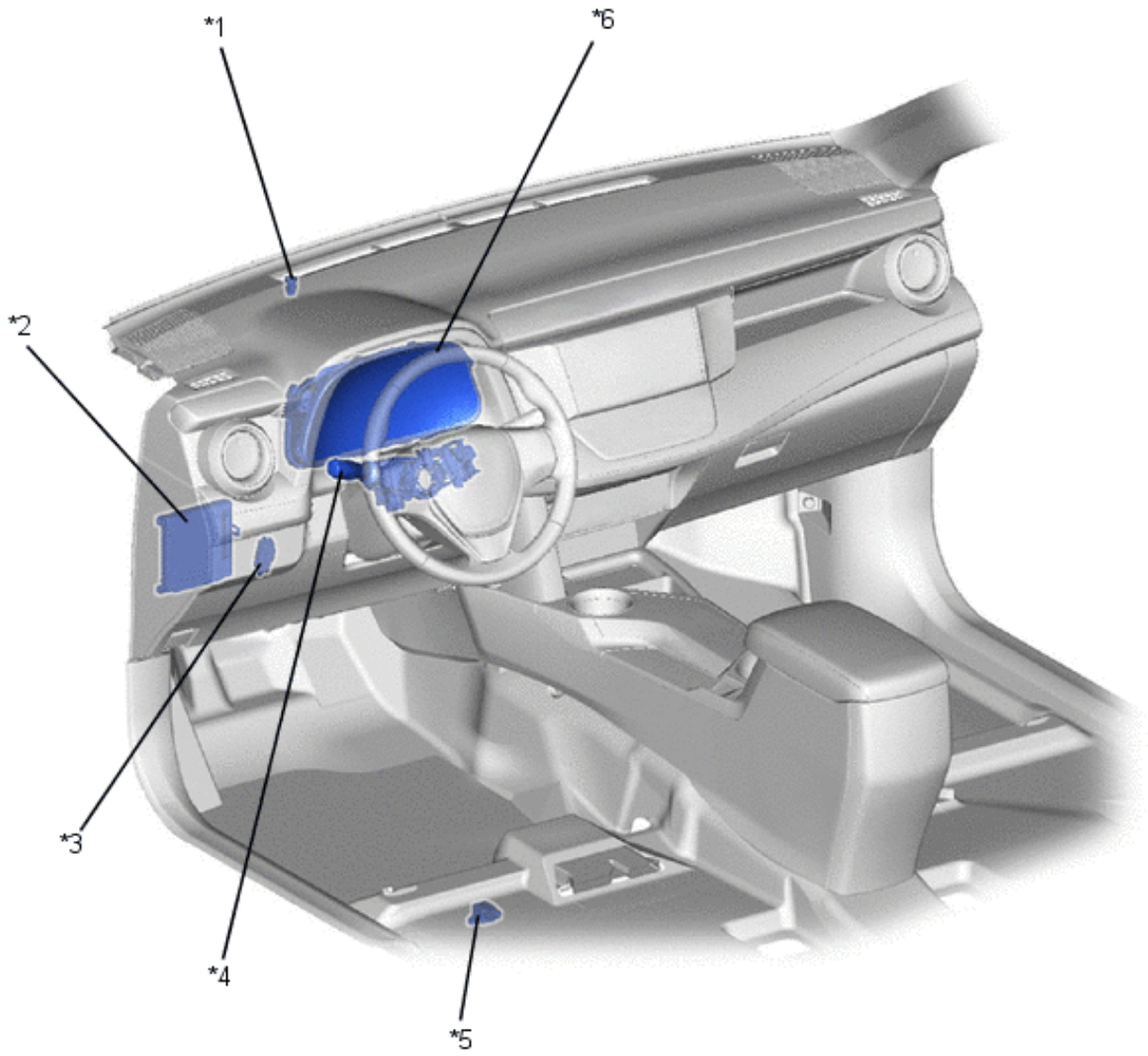


| | | | |
|---|---|---|---|
| *1 | Automatic Light Control Sensor | *2 | Main Body ECU (Multiplex Network Body ECU) |
| *3 | Stop Light Switch Assembly | *4 | Headlight Dimmer Switch Assembly |

| | | | |
|---|---|---|---|
| *5 | Yawrate Sensor | *6 | Combination Meter Assembly |