| | | |
|---|---|---|
| **Last Modified:** 03-12-2013 | 6.4 F | **Doc ID:** NM1000000005PTM |
| **Model Year:** 2013 | **Model:** RAV4 | **Prod Date Range:** [12/2012 - ] |
| **Title:** GF1A TRANSFER / 4WD / AWD: DYNAMIC TORQUE CONTROL AWD SYSTEM: PARTS LOCATION; 2013 MY RAV4 [12/2012 - ] | | |

# PARTS LOCATION

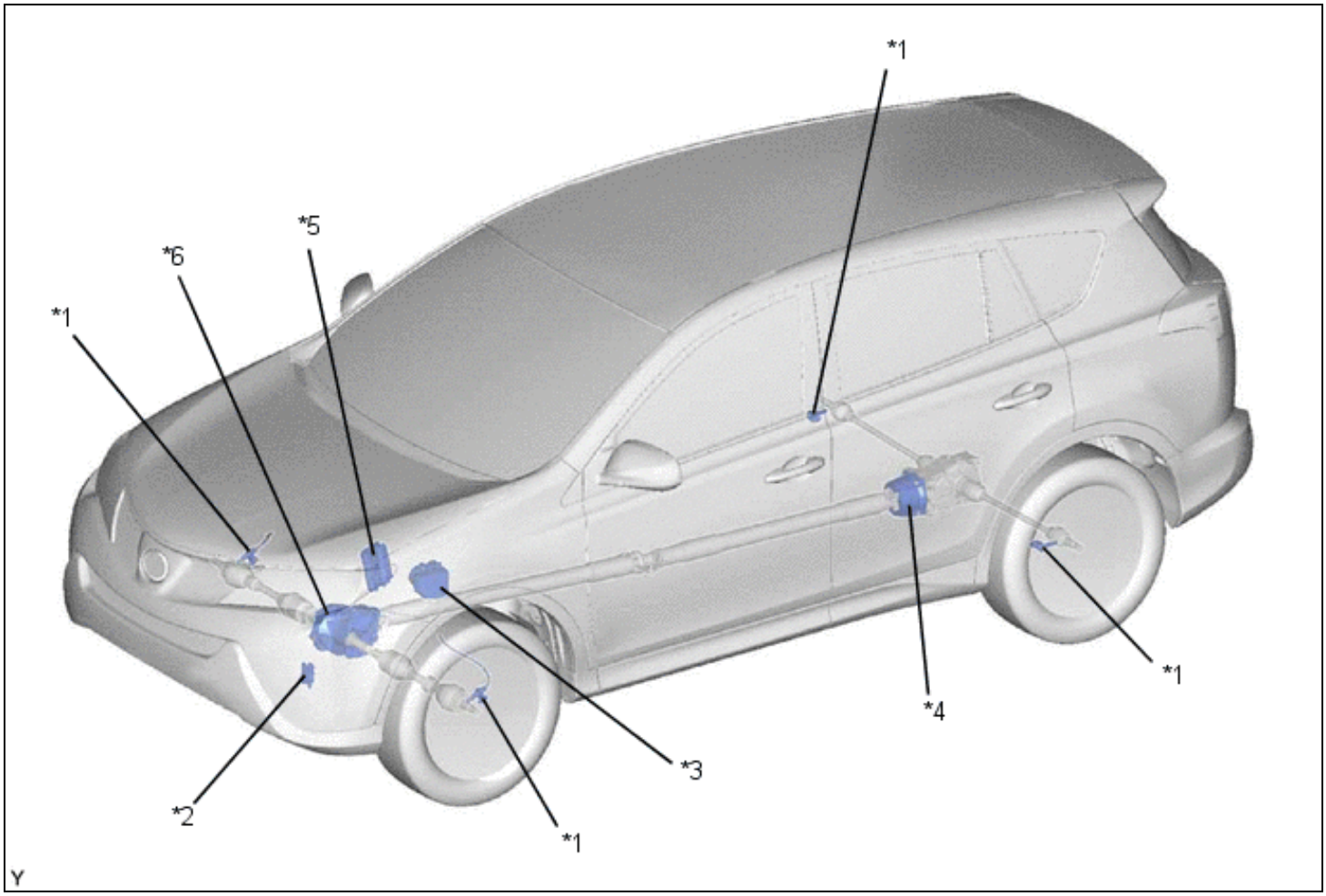


| | | | |
|---|---|---|---|
| *1 | Speed Sensor | *2 | Park/Neutral Position Switch Assembly |
| *3 | Brake Actuator Assembly<br>• Skid Control ECU | *4 | Electromagnetic Control Coupling (Transmission Coupling Assembly)<br>• Electromagnetic Solenoid |
| *5 | ECM | *6 | Transfer |

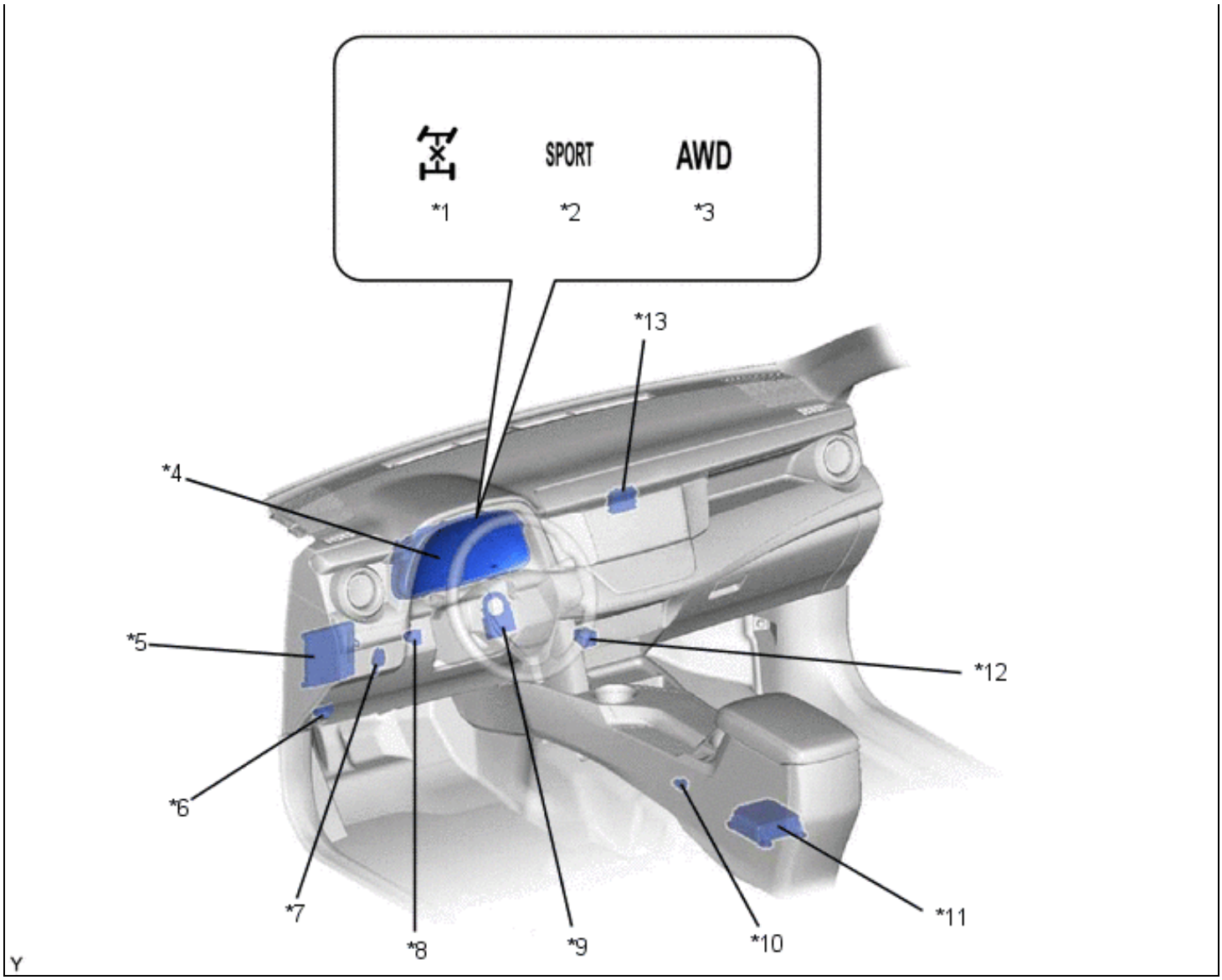


| | | | |
|---|---|---|---|
| *1 | Differential Lock Indicator Light | *2 | Sport Mode Indicator Light |
| *3 | AWD Warning Light | *4 | Combination Meter Assembly |
| *5 | Main Body ECU (Multiplex Network Body ECU) | *6 | DLC3 |
| *7 | Stop Light Switch Assembly | *8 | Differential Lock Switch |
| *9 | Steering Sensor | *10 | Parking Brake Switch |
| *11 | Center Airbag Sensor Assembly | *12 | Sport Mode Switch |
| *13 | 4WD ECU Assembly | - | - |