| | | |
|---|---|---|
| **Last Modified:** 03-12-2013 | 6.4 F | **Doc ID:** NM1000000004IEK |
| **Model Year:** 2013 | **Model:** RAV4 | **Prod Date Range:** [12/2012 - ] |
| **Title:** SUPPLEMENTAL RESTRAINT SYSTEMS: AIRBAG SYSTEM: GENERAL; 2013 MY RAV4 [12/2012 - ] | | |

# GENERAL

## 1. OUTLINE

(a) The Supplemental Restraint System (SRS) driver and front passenger and curtain shield airbags are used as supplements to the seat belts to help to reduce the shocks to the head and chest of the driver or front passenger in the event of a frontal collision.

(b) An SRS driver knee airbag is used as a supplement to the seat belt to help to reduce the shock to the knee of the driver in the event of a frontal collision.*

*: Models with SRS driver knee airbag

(c) SRS front side airbags are used during a side collision to help reduce the impact to the chests of the driver and front passenger.

(d) An SRS seat cushion airbag is used as a supplement to the seat belts to prevent the front passenger from sliding forward in the event of a front impact collision.*

*: Models with SRS seat cushion airbag

(e) SRS curtain shield airbags are used in the event of a frontal or a side or side rear collision to help reduce the impact to the heads of the front passenger or rear passengers.

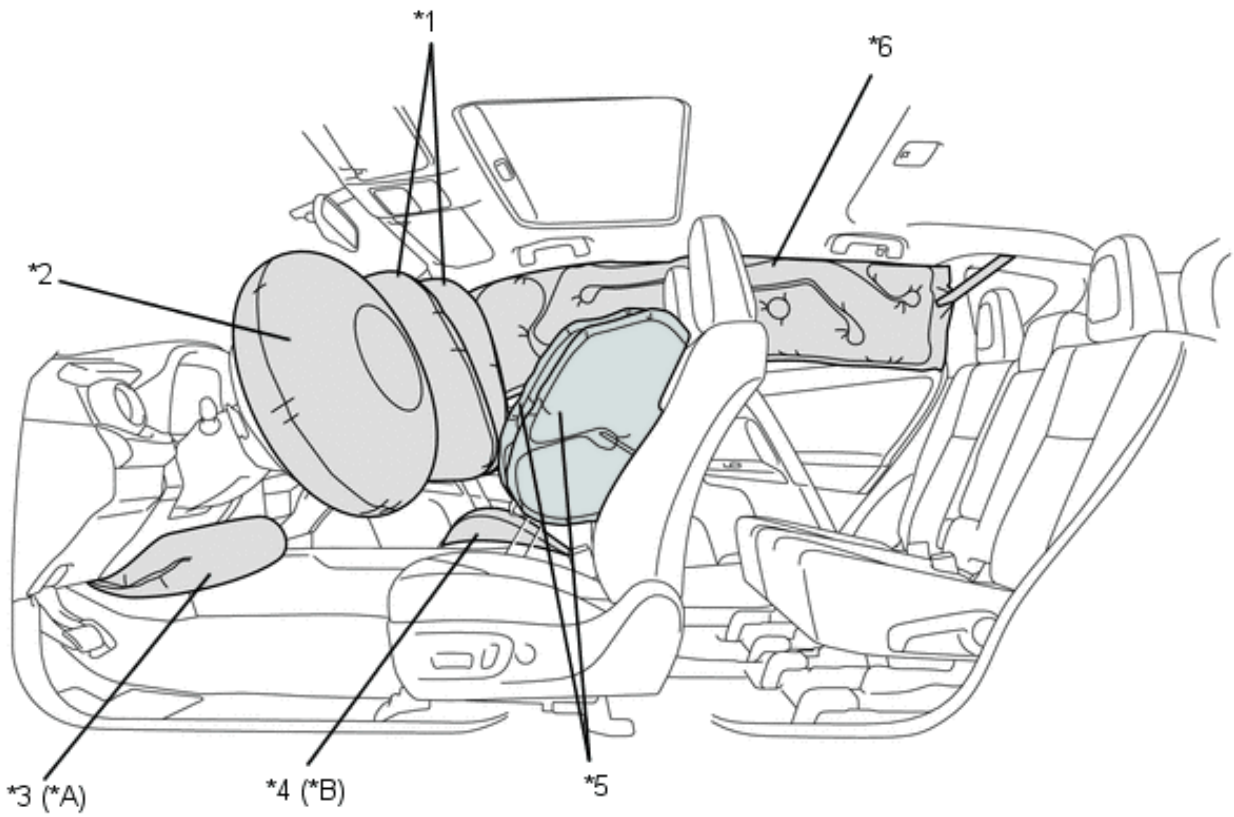


0

| | | | |
|---|---|---|---|
| *A | Models with SRS Driver Knee Airbag | *B | Models with SRS Seat Cushion Airbag |
| *1 | SRS Front Passenger Airbag | *2 | SRS Driver Airbag |
| *3 | SRS Driver Knee Airbag | *4 | SRS Seat Cushion Airbag |
| *5 | SRS Front Side Airbag | *6 | SRS Curtain Shield Airbag |

## 2. PRECAUTION

(a) Event Data Recorder (EDR)

(1) This vehicle is equipped with an Event Data Recorder (EDR). The main purpose of an EDR is to record data that will assist in understanding how vehicle's systems have performed in certain crash or near-crash situations (for example, situations involving airbag deployment or collisions with a road obstacle). The EDR is designed to record data related to vehicle dynamics and safety systems for a short period of time, typically 30 seconds or less.

(2) The EDR is designed to record such data as:

- How various systems were operating
- Whether or not the driver and passenger safety belts were fastened/buckled
- How far (if at all) the driver was depressing the accelerator and/or brake pedal
- The vehicle speed

(3) These data can be used to gain a better understanding of the circumstances in which crashes and injuries occur.

**NOTICE:**

Data are only recorded by the EDR in serious crash situations. No data are recorded by the EDR under normal driving conditions and no personal data (for example, name, gender, age and crash location) are recorded.

However, other parties, such as law enforcement, may be able to combine the EDR data with the type of personally identifying data routinely acquired during a crash investigation. To read data recorded by an EDR, special equipment is required, and access to the vehicle or the EDR is needed. In addition to the vehicle manufacturer, other parties which have the necessary special equipment, such as law enforcement agencies, will be able to read the information if they have access to the vehicle or the EDR.

(4) Toyota will not disclose the data recorded in an EDR to a third party except when:

- An agreement from the vehicle's owner (or the lessee for a leased vehicle) is obtained
- Officially requested by the police or other authorities
- For use by Toyota in a law suit
- Ordered by a court of law

(5) However, if necessary, Toyota will:

- Use the data for research on vehicle safety performance
- Disclose the data to a third party for research purposes without disclosing information about the specific vehicle or vehicle owner