| | | |
|---|---|---|
| **Last Modified:** 03-12-2013 | 6.4 F | **Doc ID:** NM1000000004HC5 |
| **Model Year:** 2013 | **Model:** RAV4 | **Prod Date Range:** [12/2012 - ] |
| **Title:** 2AR-FE ENGINE CONTROL: SFI SYSTEM: THROTTLE CONTROL MOTOR; 2013 MY RAV4 [12/2012 - ] | | |

# THROTTLE CONTROL MOTOR

## 1. CONSTRUCTION

(a) A DC motor with excellent response and minimal power consumption is used for the throttle control motor. The ECM performs the duty cycle control of the direction and the amperage of the current that flows to the throttle control motor in order to regulate the opening of the throttle valve.

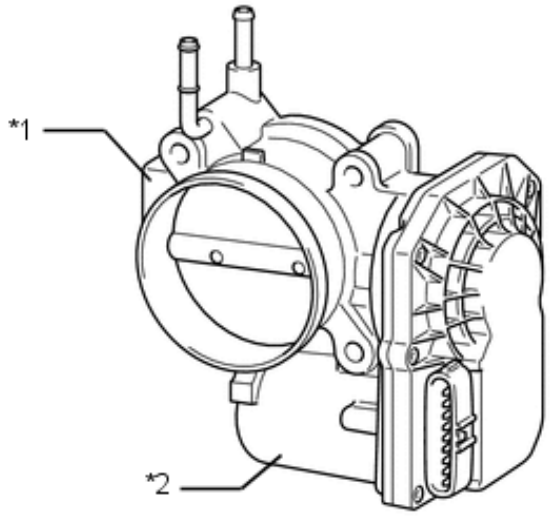


| | | | |
|---|---|---|---|
| *1 | Throttle Body Assembly | *2 | Throttle Control Motor |