| | | |
|---|---|---|
| **Last Modified:** 03-12-2013 | 6.4 F | **Doc ID:** NM1000000004HDH |
| **Model Year:** 2013 | **Model:** RAV4 | **Prod Date Range:** [12/2012 - ] |
| **Title:** 2AR-FE INTAKE / EXHAUST: INTAKE SYSTEM: AIR CLEANER; 2013 MY RAV4 [12/2012 - ] | | |

# AIR CLEANER

### 1. CONSTRUCTION

(a) A paper filter type air cleaner element is used.

(b) A charcoal filter, which absorbs the HC that accumulates in the intake system when the engine is stopped, is used in the air cleaner cap in order to reduce evaporative emissions.

(c) To ensure improved quietness, a dual-chamber resonator is used.

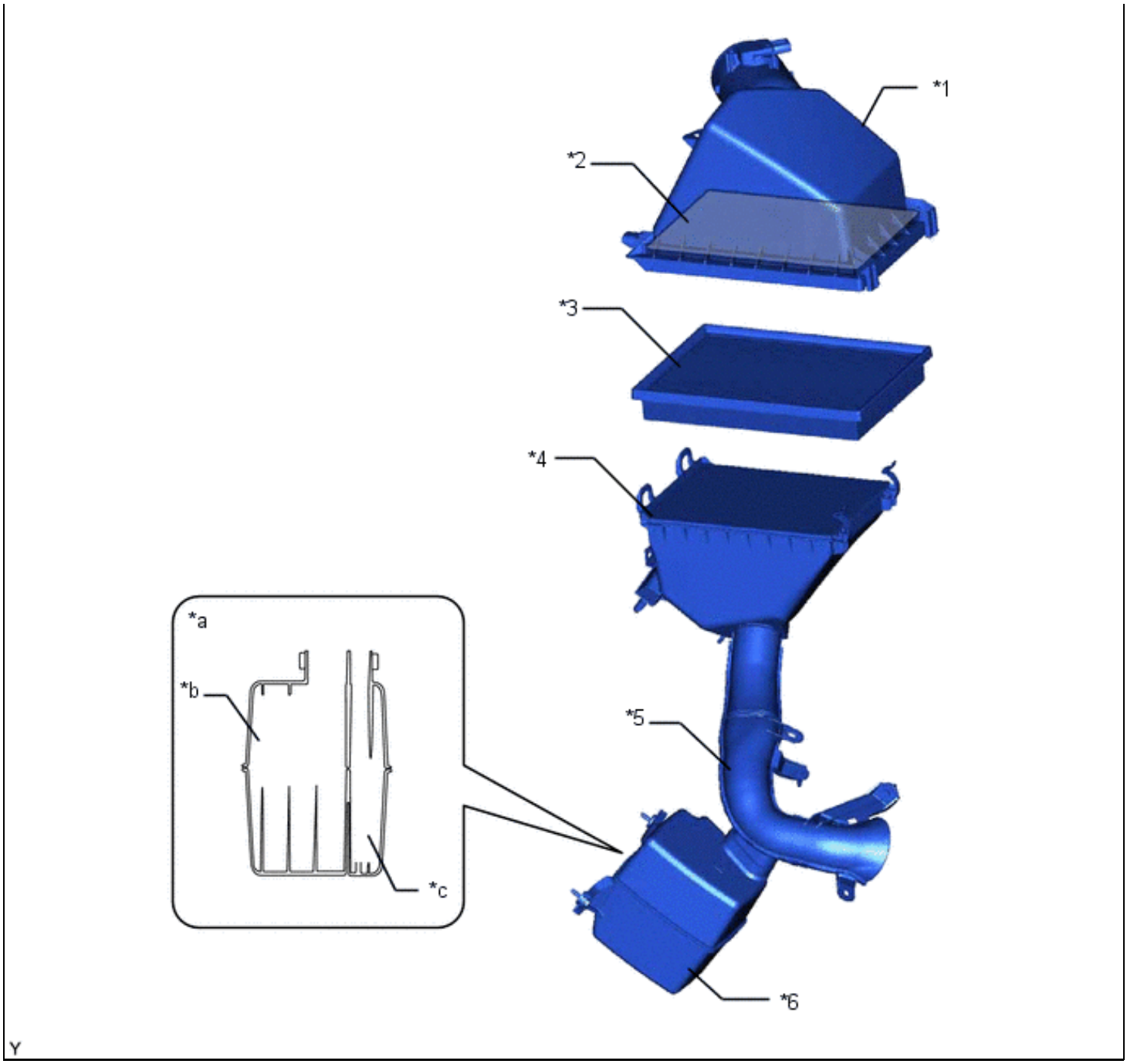


| | | | |
|---|---|---|---|
| *1 | Air Cleaner Cap | *2 | Charcoal Filter |
| *3 | Air Cleaner Element | *4 | Air Cleaner Case |
| *5 | Air Cleaner Inlet | *6 | Resonator |
| *a | Resonator Cross Section | *b | Chamber A |
| *c | Chamber B | - | - |