| | | |
|---|---|---|
| **Last Modified:** 03-12-2013 | 6.4 F | **Doc ID:** NM1000000005Q74 |
| **Model Year:** 2013 | **Model:** RAV4 | **Prod Date Range:** [12/2012 - ] |
| **Title:** U760F AUTOMATIC TRANSMISSION / TRANSAXLE: AUTOMATIC TRANSAXLE SYSTEM: ATF STRAINER; 2013 MY RAV4 [12/2012 - ] | | |

# ATF STRAINER

## 1. CONSTRUCTION

(a) A felt type ATF strainer is used for its light weight, excellent debris capturing ability and increased reliability. This ATF strainer is maintenance-free.

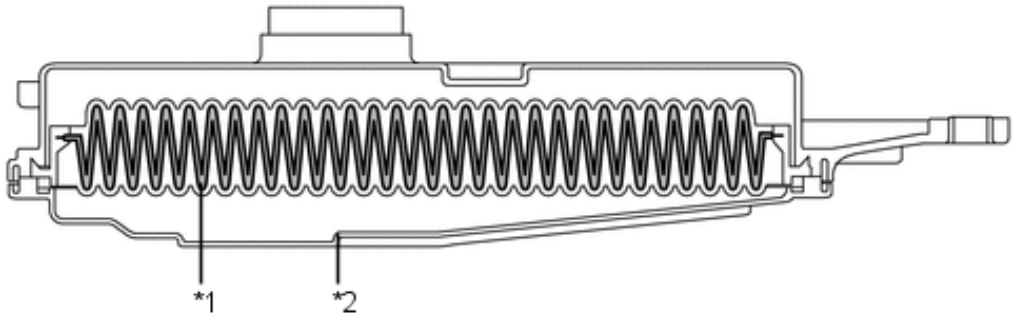


| | | | |
|---|---|---|---|
| *1 | ATF Filter | *2 | ATF Strainer |