| | | |
|---|---|---|
| **Last Modified:** 03-12-2013 | 6.4 F | **Doc ID:** NM1000000004IE3 |
| **Model Year:** 2013 | **Model:** RAV4 | **Prod Date Range:** [12/2012 - ] |
| **Title:** PARK ASSIST / MONITORING: INTUITIVE PARKING ASSIST SYSTEM: PARTS LOCATION; 2013 MY RAV4 [12/2012 - ] | | |

# PARTS LOCATION

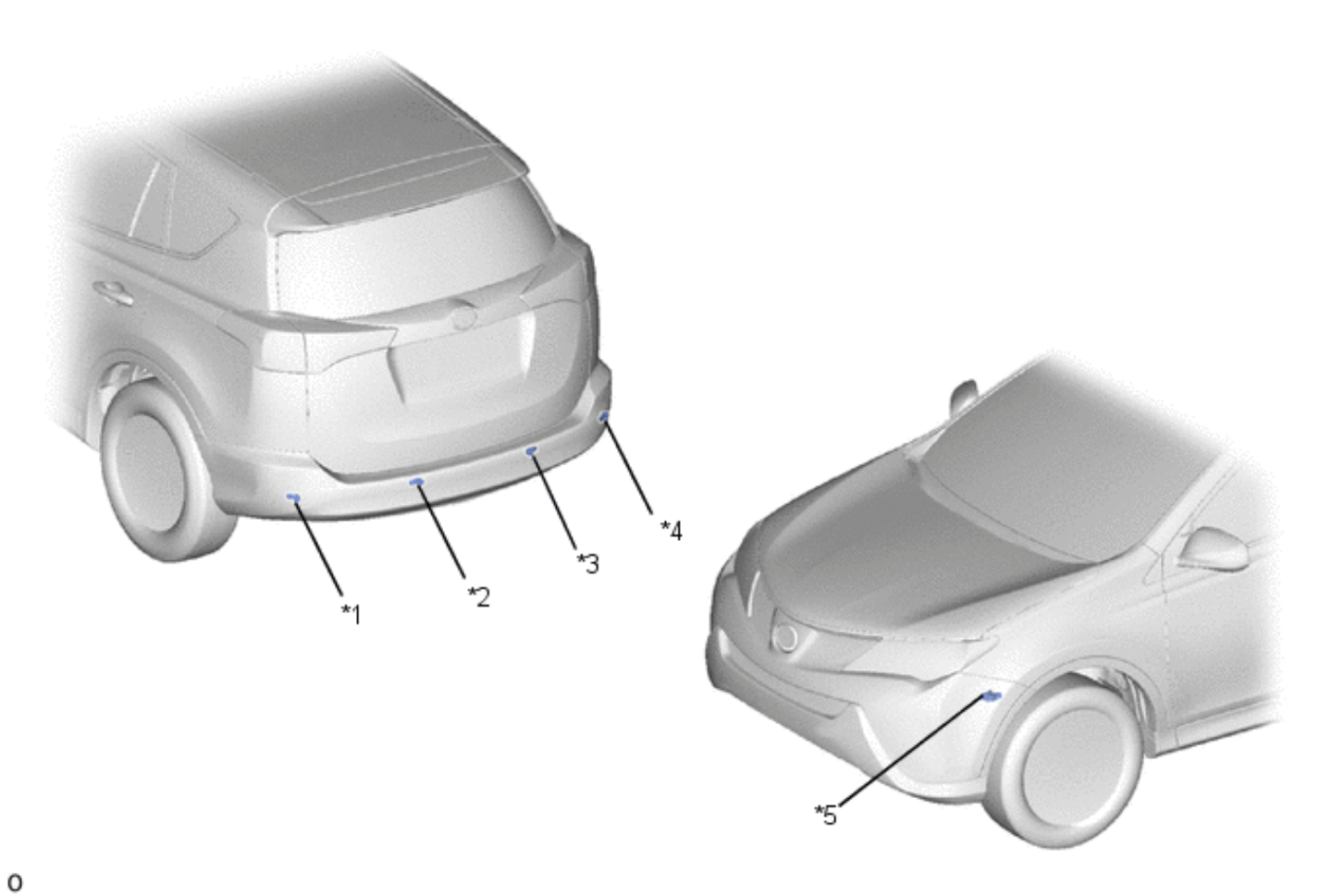


| | | | |
|---|---|---|---|
| *1 | No. 1 Ultrasonic Sensor (Rear Corner LH) | *2 | No. 1 Ultrasonic Sensor (Rear Center LH) |
| *3 | No. 1 Ultrasonic Sensor (Rear Center RH) | *4 | No. 1 Ultrasonic Sensor (Rear Corner RH) |
| *5 | Park/Neutral Position Switch Assembly | - | - |

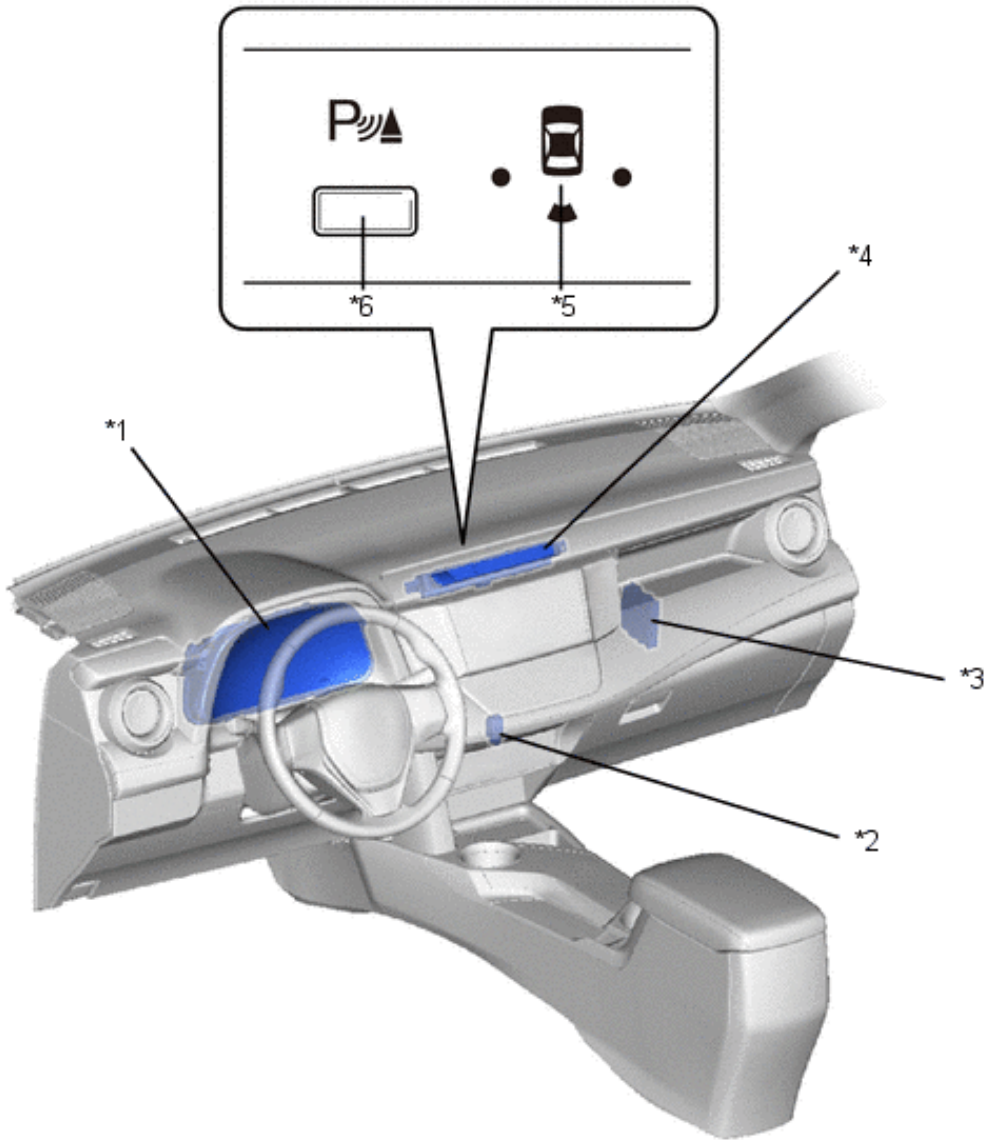


o

| | | | |
|---|---|---|---|
| *1 | Combination Meter Assembly | *2 | No. 1 Clearance Warning Buzzer |
| *3 | Clearance Warning ECU Assembly | *4 | Telltale Light Assembly |
| *5 | Clearance Warning Indicator Light | *6 | Clearance Sonar Switch |