| | | |
|---|---|---|
| **Last Modified:** 03-12-2013 | 6.4 F | **Doc ID:** NM1000000005PV6 |
| **Model Year:** 2013 | **Model:** RAV4 | **Prod Date Range:** [12/2012 - ] |
| **Title:** STEERING COLUMN: STEERING LOCK SYSTEM: PARTS LOCATION; 2013 MY RAV4 [12/2012 - ] | | |

# PARTS LOCATION

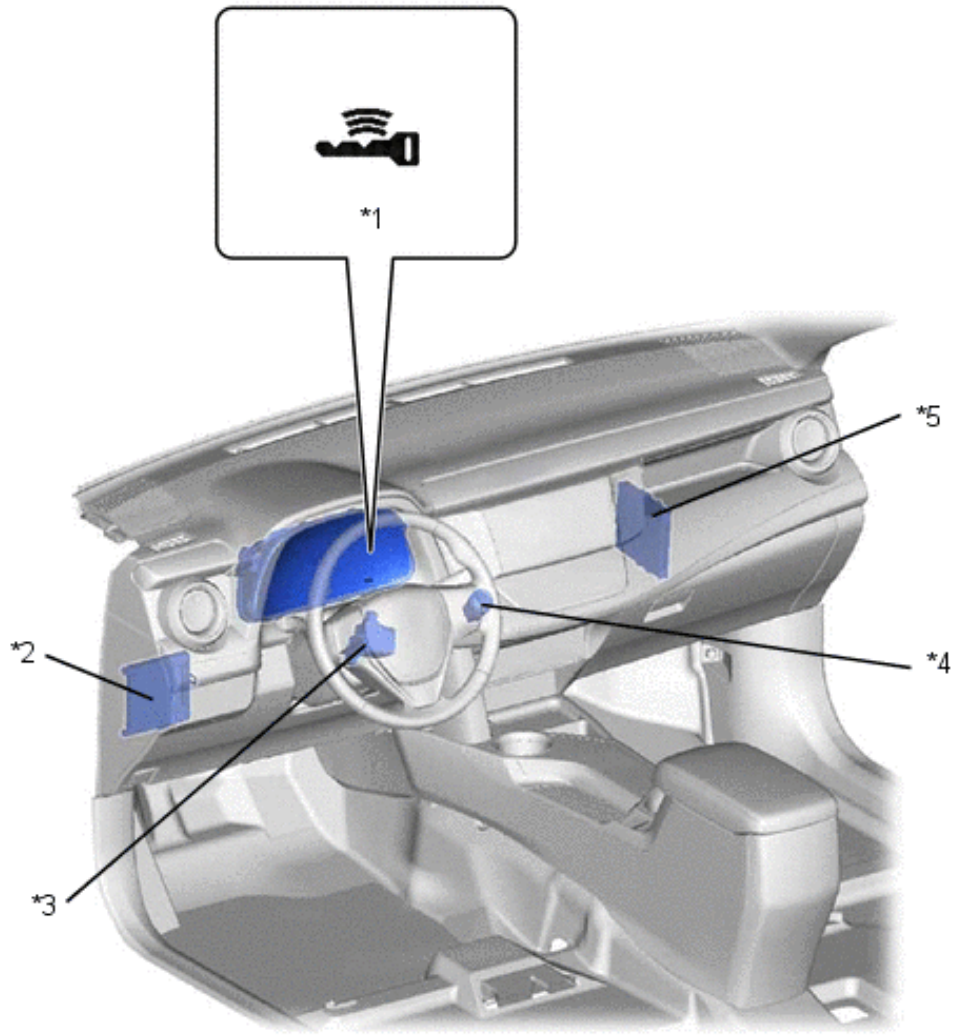


Y

| | | | |
|---|---|---|---|
| *1 | Entry Warning Indicator | *2 | Main Body ECU (Multiplex Network Body ECU) |
| *3 | Steering Lock Actuator Assembly<br>• Lock/Unlock Motor<br>• Lock Sensor<br>• Unlock Sensor<br>• Steering Lock ECU | *4 | Engine Switch (Push Start Switch) |
| *5 | Certification ECU (Smart Key ECU Assembly) | - | - |