| | | |
|---|---|---|
| **Last Modified:** 03-12-2013 | 6.4 F | **Doc ID:** NM1000000004HDF |
| **Model Year:** 2013 | **Model:** RAV4 | **Prod Date Range:** [12/2012 - ] |
| **Title:** 2AR-FE EMISSION CONTROL: EMISSION CONTROL SYSTEM: SYSTEM DIAGRAM; 2013 MY RAV4 [12/2012 - ] | | |

# SYSTEM DIAGRAM

### Exhaust Emission Control System

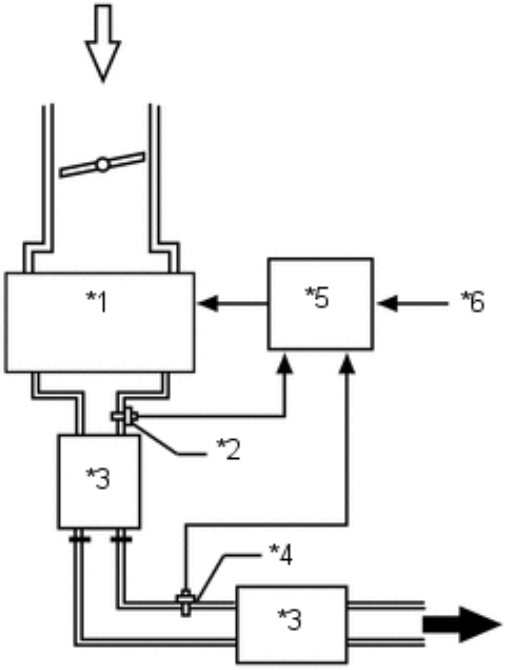


| | | | |
|---|---|---|---|
| *1 | Engine<br>• Fuel Injector Assembly | *2 | Air Fuel Ratio Sensor (Bank 1, Sensor 1) |
| *3 | TWC | *4 | Oxygen Sensor (Bank 1, Sensor 2) |
| *5 | ECM | *6 | Various Sensors |
| ⇨ | Intake Air | ➡ | Exhaust Gas |

### Evaporative Emission Control System

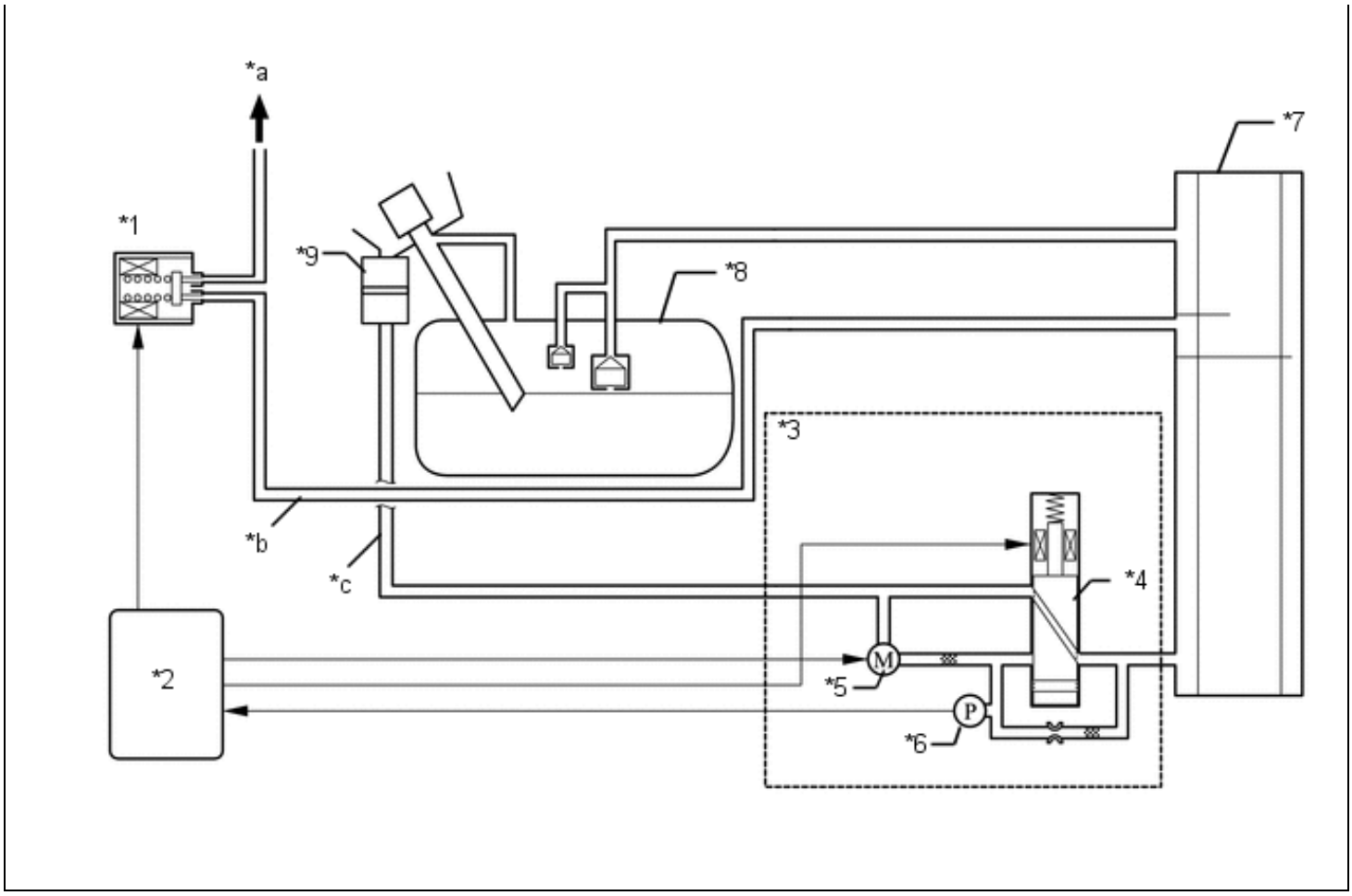


| | | | |
|---|---|---|---|
| *1 | Purge VSV | *2 | ECM |
| *3 | Canister Pump Module | *4 | Vent Valve |
| *5 | Leak Detection Pump and Pump Motor | *6 | Canister Pressure Sensor |
| *7 | Charcoal Canister Assembly | *8 | Fuel Tank Assembly |
| *9 | No. 1 Charcoal Canister Filter | - | - |
| *a | To Intake Manifold | *b | Purge Air Line |
| *c | Fresh Air Line | - | - |