| | | |
|---|---|---|
| **Last Modified:** 03-12-2013 | 6.4 F | **Doc ID:** NM1000000005G0G |
| **Model Year:** 2013 | **Model:** RAV4 | **Prod Date Range:** [12/2012 - ] |
| **Title:** NETWORKING: CAN COMMUNICATION SYSTEM: SYSTEM DIAGRAM; 2013 MY RAV4 [12/2012 - ] | | |

# SYSTEM DIAGRAM

V Bus

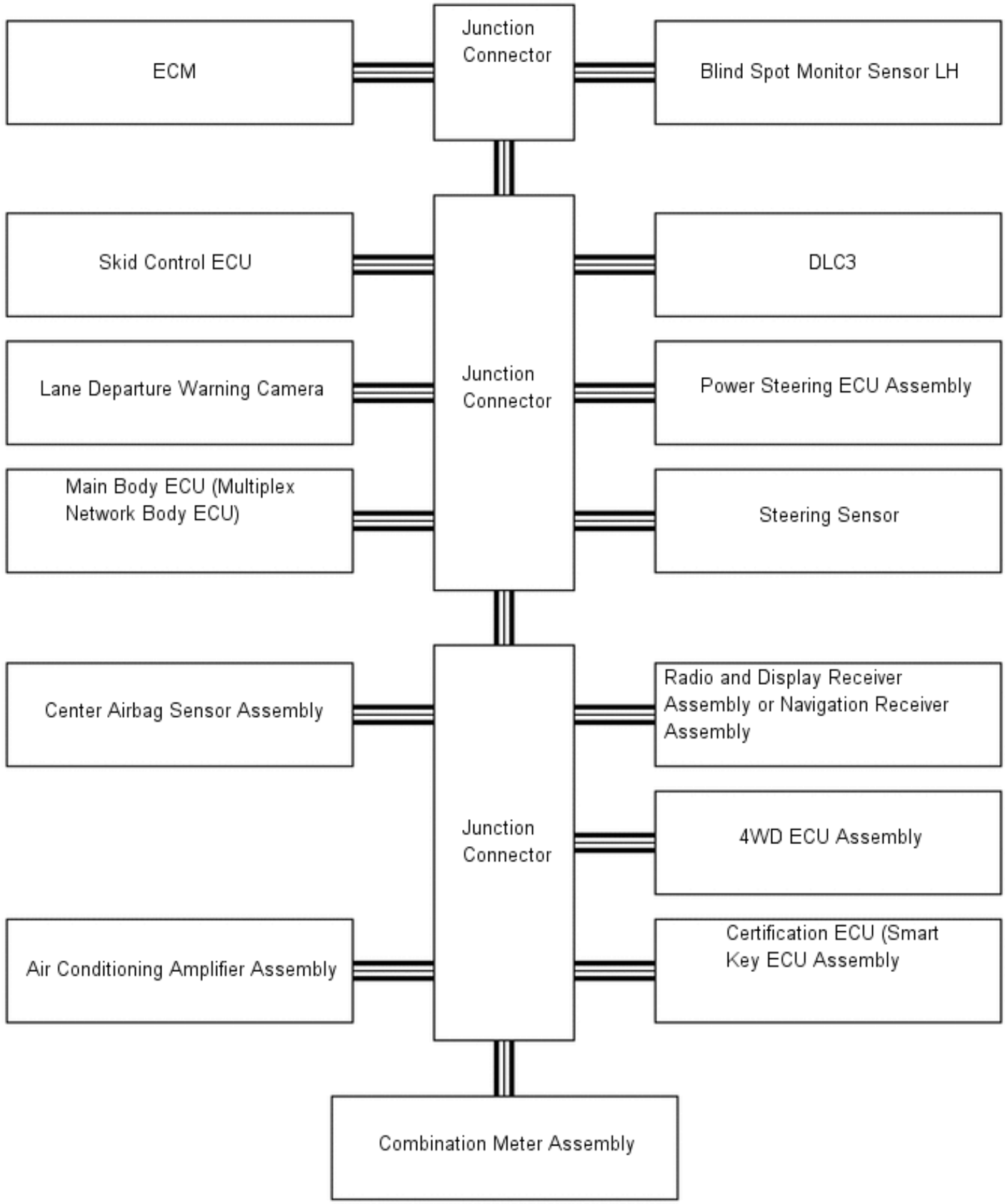


Sub Bus 1

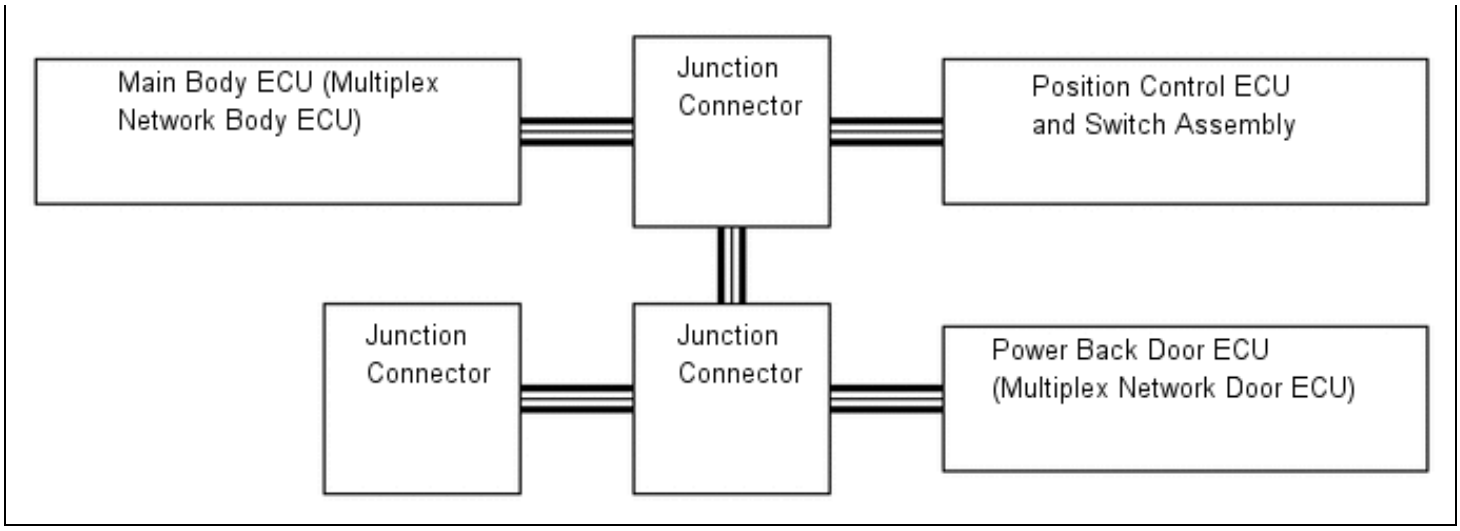
Main Body ECU (Multiplex Network Body ECU)
Junction Connector
Position Control ECU and Switch Assembly
Junction Connector
Junction Connector
Power Back Door ECU (Multiplex Network Door ECU)

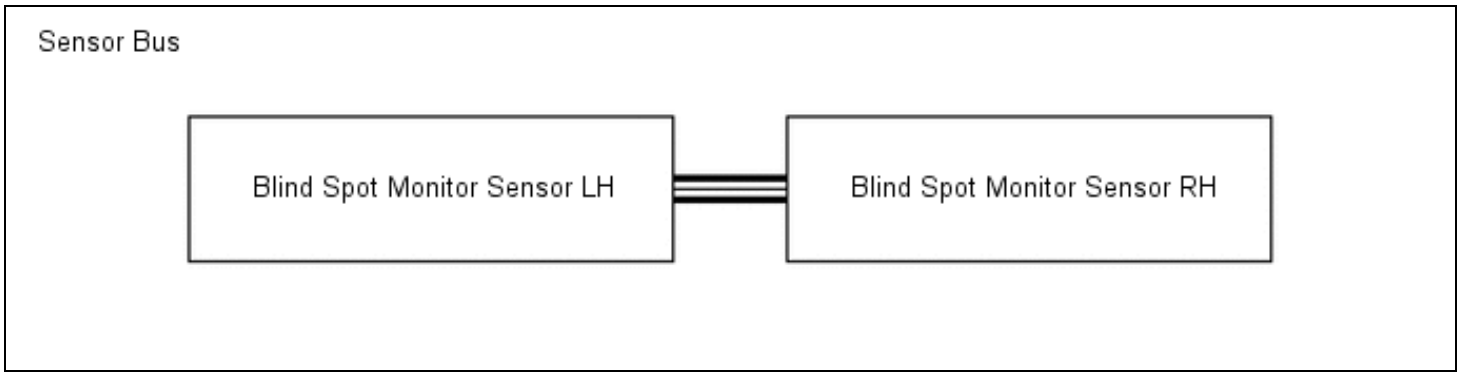
Sensor Bus
Blind Spot Monitor Sensor LH
Blind Spot Monitor Sensor RH

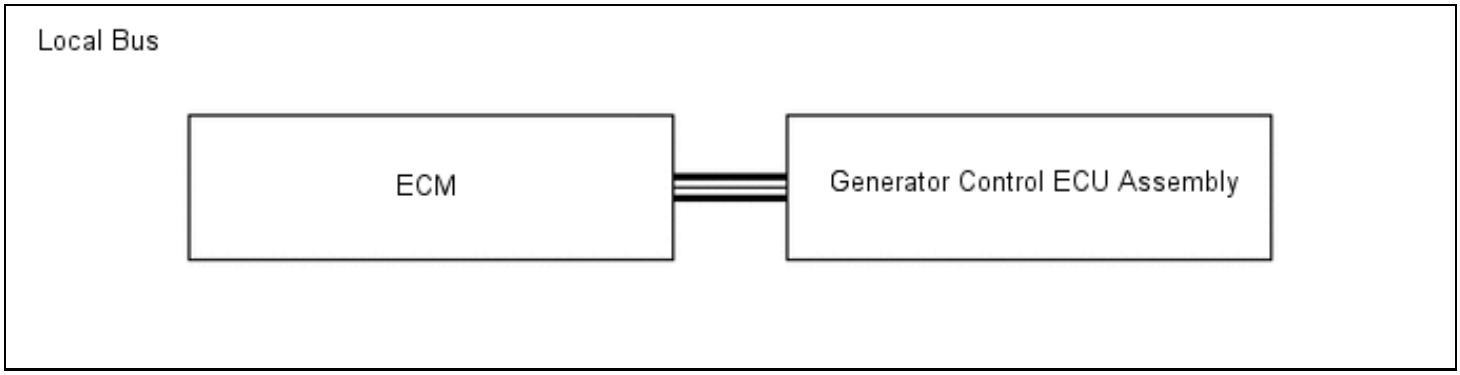
Local Bus
ECM
Generator Control ECU Assembly