| | | |
|---|---|---|
| **Last Modified:** 03-12-2013 | 6.4 F | **Doc ID:** NM1000000005PV8 |
| **Model Year:** 2013 | **Model:** RAV4 | **Prod Date Range:** [12/2012 - ] |
| **Title:** STEERING COLUMN: STEERING COLUMN SYSTEM: ENERGY ABSORBING MECHANISM; 2013 MY RAV4 [12/2012 - ] | | |

# ENERGY ABSORBING MECHANISM

## 1. CONSTRUCTION

(a) The energy absorbing mechanism mainly consists of a breakaway bracket, steering intermediate shaft assembly and column tube. The steering column assembly is mounted on the instrument panel reinforcement via the breakaway bracket. The steering column assembly and the steering gear assembly are connected with a contractile steering intermediate shaft assembly.

## 2. OPERATION

(a) Primary Collision

(1) When the steering gear assembly moves during a collision (primary collision), the steering intermediate shaft assembly contracts, thus helping reduce the possibility of the steering column assembly and the steering wheel protruding into the cabin.

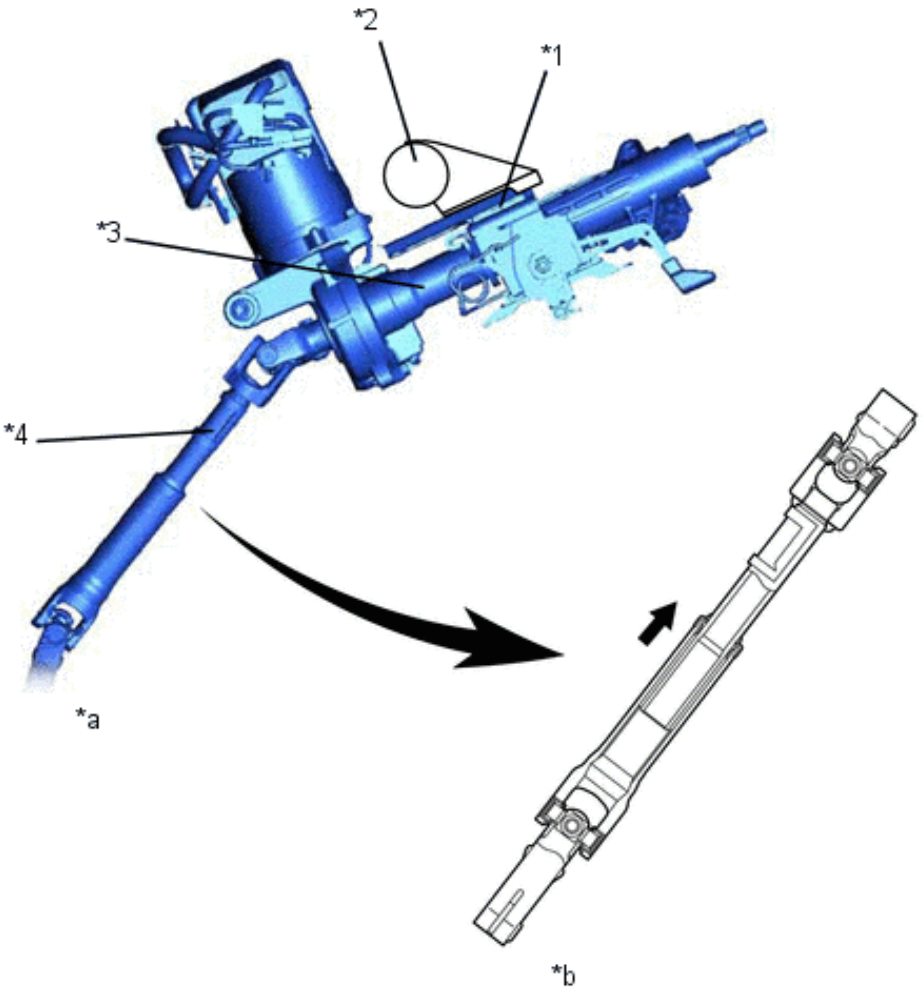


Y

| | | | |
|---|---|---|---|
| *1 | Breakaway Bracket | *2 | Instrument Panel Reinforcement |
| *3 | Column Tube | *4 | Steering Intermediate Shaft Assembly |
| *a | Before Collision | *b | After Collision |
| ➡ | Contract | - | - |

(b) Secondary Collision

(1) When a collision impact is transmitted to the steering wheel (secondary collision), the steering wheel and the airbag help absorb the impact. In addition, the breakaway bracket separates and the column tube contracts. At this time, the friction resistance of the sliding portion, which is staked to the column tube, absorbs the energy. This sequential energy absorbing mechanism helps absorb the impact of the secondary collision.

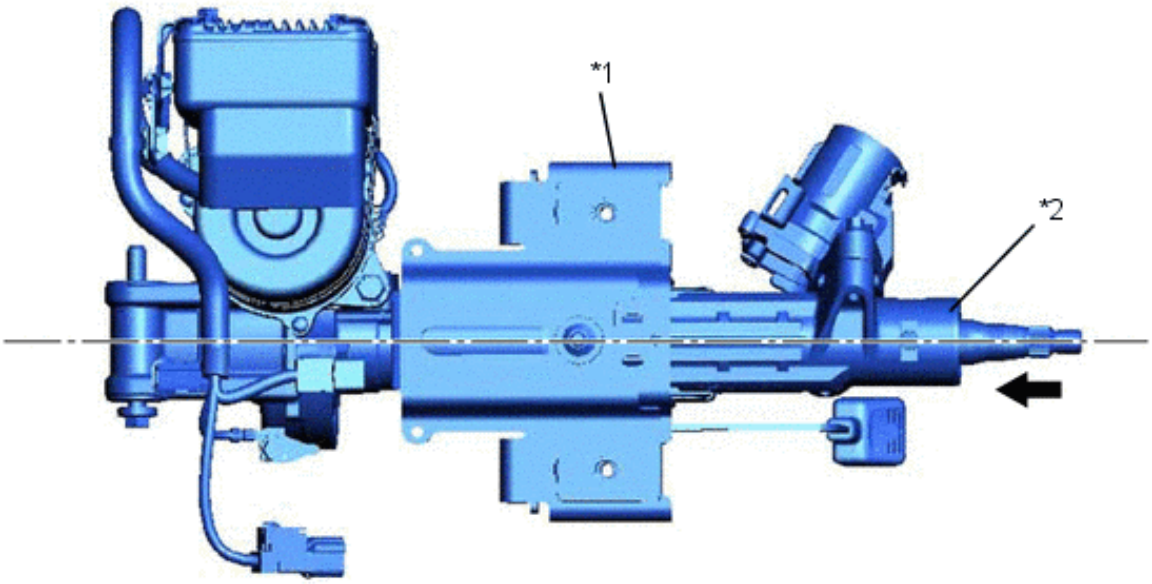


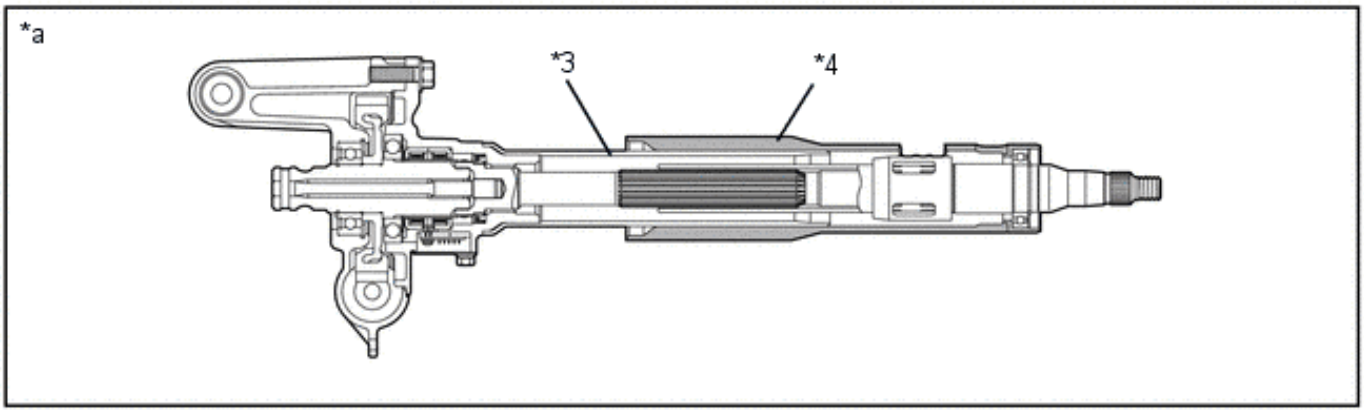


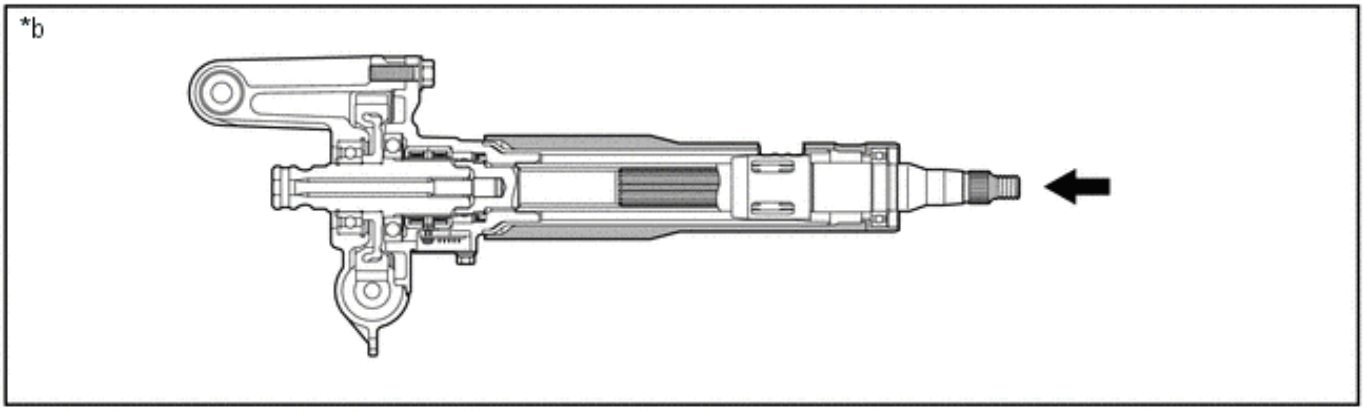


Y

| | | | |
|---|---|---|---|
| *1 | Breakaway Bracket | *2 | Column Tube |
| *3 | Inner Tube | *4 | Outer Tube |
| *a | Before Collision | *b | After Collision |
| ➡ | Contract | - | - |