| | | |
|---|---|---|
| **Last Modified:** 03-12-2013 | 6.4 F | **Doc ID:** NM1000000004HDI |
| **Model Year:** 2013 | **Model:** RAV4 | **Prod Date Range:** [12/2012 - ] |
| **Title:** 2AR-FE INTAKE / EXHAUST: INTAKE SYSTEM: THROTTLE BODY; 2013 MY RAV4 [12/2012 - ] | | |

# THROTTLE BODY

## 1. CONSTRUCTION

(a) A linkless-type throttle body assembly is used and it achieves excellent throttle control.

(b) A DC motor with excellent response and minimal power consumption is used for the throttle control motor. The ECM performs the duty cycle control of the direction and the amperage of the current that flows to the throttle control motor in order to regulate the opening angle of the throttle valve.

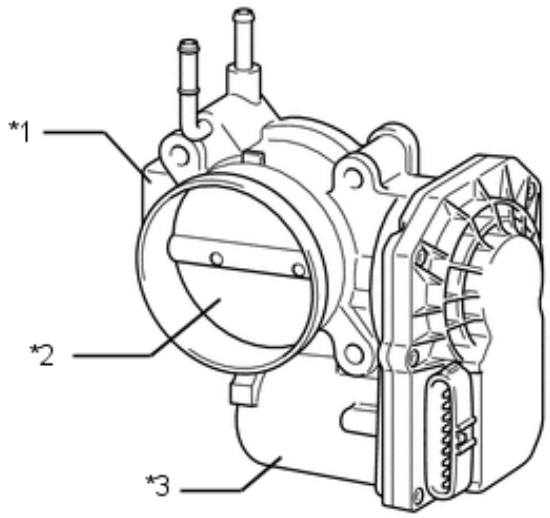


| | | | |
|---|---|---|---|
| *1 | Throttle Body Assembly | *2 | Throttle Valve |
| *3 | Throttle Control Motor | - | - |