| | | |
|---|---|---|
| **Last Modified:** 03-12-2013 | 6.4 F | **Doc ID:** NM1000000005PTT |
| **Model Year:** 2013 | **Model:** RAV4 | **Prod Date Range:** [12/2012 - ] |
| **Title:** AXLE AND DIFFERENTIAL: AXLE SYSTEM: GENERAL; 2013 MY RAV4 [12/2012 - ] | | |

# GENERAL

## 1. OUTLINE

(a) Front Axle

(1) Compact and highly rigid double-row angular ball bearings are used. The double-row angular ball bearings and the axle hub are integrated to ensure high rigidity, thus achieving excellent driving stability and braking stability.

(2) The speed sensor rotor is integrated in the bearing inner race.

(3) A 12-point lock nut is used and staked in order to ensure that the axle hub is properly tightened. Once removed, this nut cannot be reused.

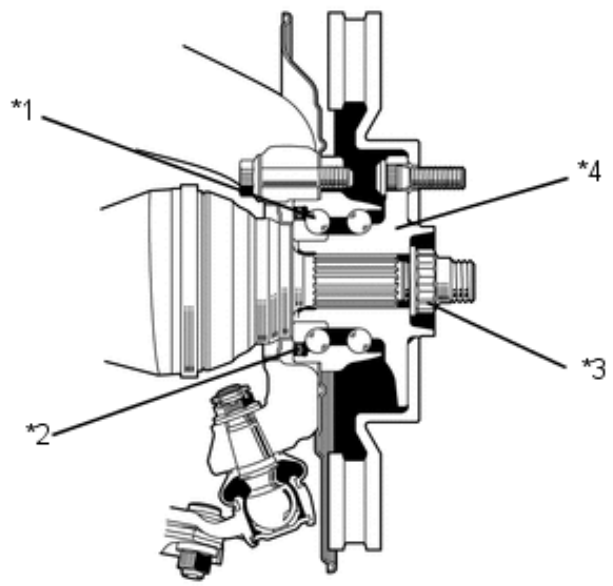


| | | | |
|---|---|---|---|
| *1 | Double-row Angular Ball Bearing | *2 | Speed Sensor Rotor |
| *3 | Lock Nut (12-point) | *4 | Front Axle Hub |

**NOTICE:**

- Do not place magnetized objects close to the surface of the sensor rotor.
- Do not allow any iron particles, iron sand, dust, debris or oil to come in contact with the surface of the sensor rotor.

(b) Rear Axle

(1) Compact and highly rigid double-row angular ball bearings are used. The double-row angular ball bearings and the axle hub are integrated to ensure high rigidity, thus achieving excellent driving stability and braking stability.

(2) The speed sensor rotor is integrated in the bearing inner race.

(3) A 12-point lock nut is used on the AWD models and staked in order to ensure that the axle hub is properly tightened. Once removed, this nut cannot be reused.

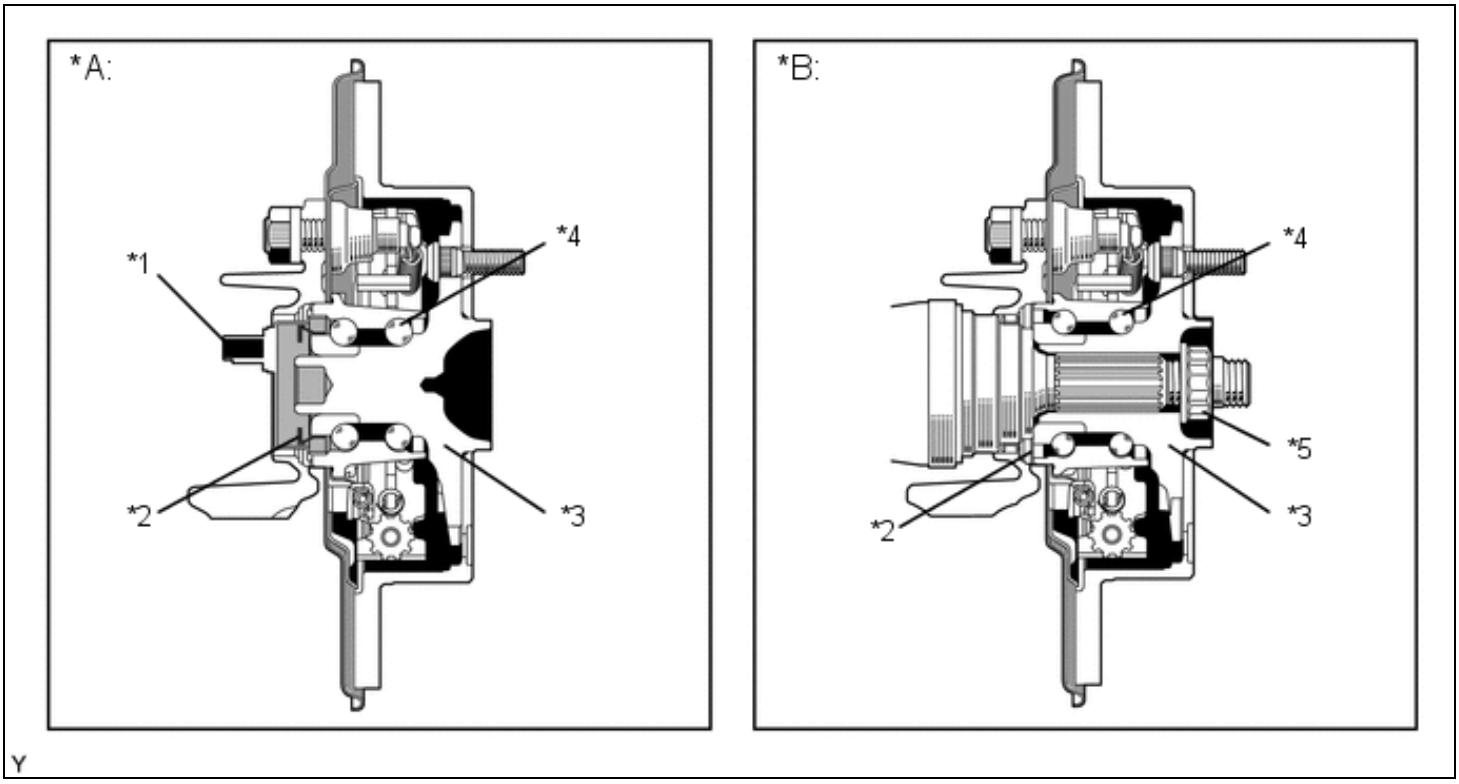


| | | | |
|---|---|---|---|
| *A | 2WD Models | *B | AWD Models |
| *1 | Speed Sensor | *2 | Speed Sensor Rotor |
| *3 | Rear Axle Hub | *4 | Double-row Angular Ball Bearing |
| *5 | Lock Nut (12-point) | - | - |

**NOTICE:**

- Do not place magnetized objects close to the surface of the sensor rotor.
- Do not allow any iron particles, iron sand, dust, debris or oil to come in contact with the surface of the sensor rotor.