| | | |
|---|---|---|
| **Last Modified:** 03-12-2013 | 6.4 F | **Doc ID:** NM1000000005PUW |
| **Model Year:** 2013 | **Model:** RAV4 | **Prod Date Range:** [12/2012 - ] |
| **Title:** POWER ASSIST SYSTEMS: POWER STEERING SYSTEM: STEERING COLUMN ASSEMBLY; 2013 MY RAV4 [12/2012 - ] | | |

# STEERING COLUMN ASSEMBLY

## 1. CONSTRUCTION

(a) The steering column assembly includes a power steering motor, reduction mechanism and power steering torque sensor.

(b) The power steering ECU assembly is integrated into the power steering motor.

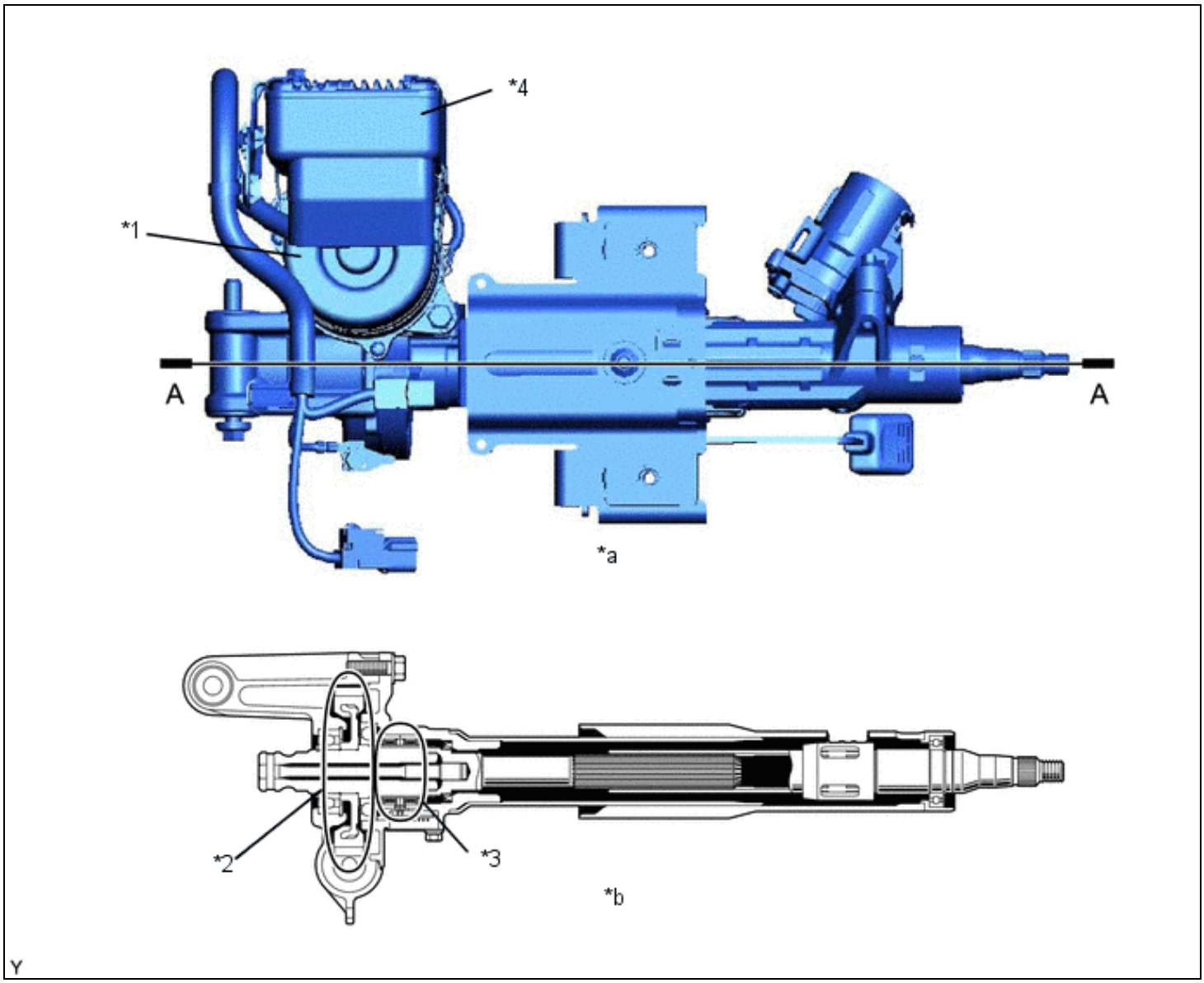


| | | | |
|---|---|---|---|
| *1 | Power Steering Motor | *2 | Reduction Mechanism |
| *3 | Power Steering Torque Sensor | *4 | Power Steering ECU Assembly |
| *a | Top View | *b | A - A Cross Section |