| | | |
|---|---|---|
| **Last Modified:** 03-12-2013 | 6.4 F | **Doc ID:** NM1000000004HCX |
| **Model Year:** 2013 | **Model:** RAV4 | **Prod Date Range:** [12/2012 - ] |
| **Title:** 2AR-FE ENGINE MECHANICAL: ENGINE UNIT: CAMSHAFT; 2013 MY RAV4 [12/2012 - ] | | |

# CAMSHAFT

## 1. CONSTRUCTION

(a) An oil passage is provided in the intake and exhaust camshafts in order to supply engine oil to the Dual VVT-i system.

(b) A VVT-i controller has been installed on each front of the intake and exhaust camshafts to vary the timing of the intake and exhaust valves.

(c) Together with the use of the valve rocker arm sub-assembly, the cam profile has been designed with an indented R (radius). This results in increased valve lift when the valve begins to open and finishes closing, helping to achieve enhanced output performance.

(d) A timing rotor for the camshaft position sensor is provided at each back end of the intake and exhaust camshafts.

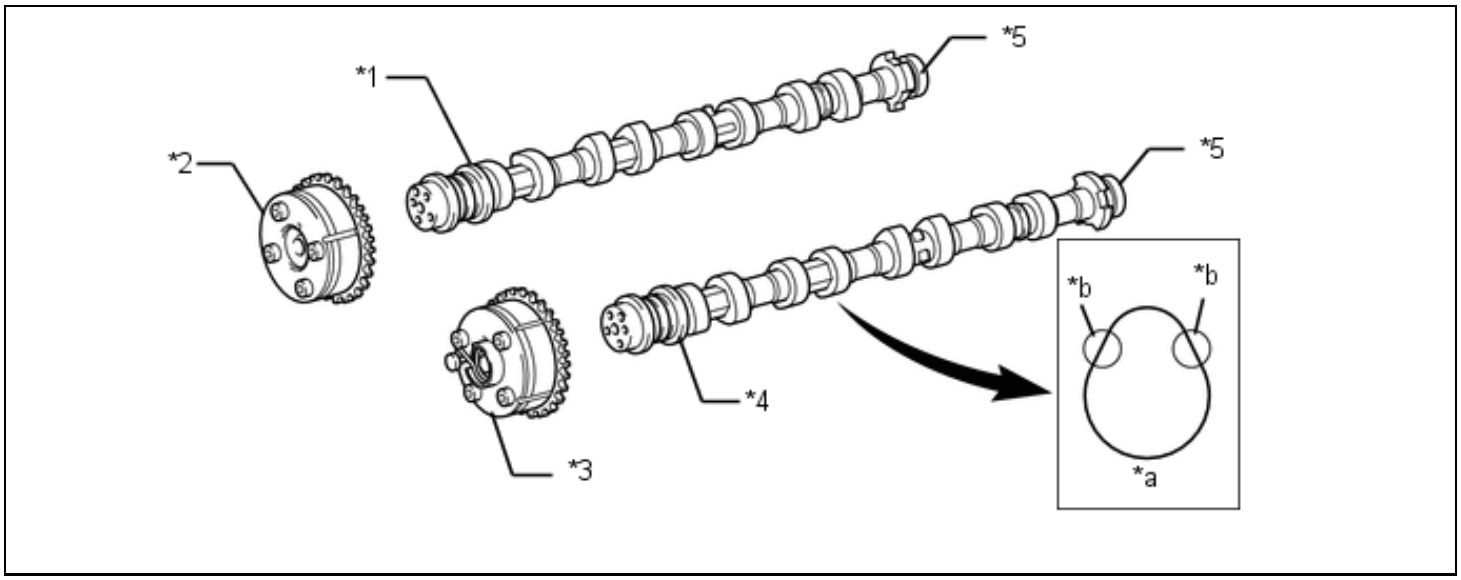


| | | | |
|---|---|---|---|
| *1 | Intake Camshaft | *2 | Intake VVT-i Controller |
| *3 | Exhaust VVT-i Controller | *4 | Exhaust Camshaft |
| *5 | Timing Rotor | - | - |
| *a | Cam with Indented R | *b | Indented R Portion of Cam (Profile) |