| | | |
|---|---|---|
| **Last Modified:** 03-12-2013 | 6.4 F | **Doc ID:** NM1000000004HCN |
| **Model Year:** 2013 | **Model:** RAV4 | **Prod Date Range:** [12/2012 - ] |
| **Title:** 2AR-FE ENGINE MECHANICAL: ENGINE UNIT: VVT-i CONTROLLER; 2013 MY RAV4 [12/2012 - ] | | |

# VVT-i CONTROLLER

## 1. CONSTRUCTION

(a) Each controller consists of a housing driven by the timing chain and a vane coupled with the intake or exhaust camshaft.

(b) Both the intake and exhaust sides have a four-blade vane.

(c) The oil pressure sent from the advanced or retarded side path at the intake and exhaust camshafts causes rotation in the VVT-i controller vane circumferential direction to vary the intake and exhaust valve timing continuously.

(d) When the engine is stopped, a lock pin locks the intake camshaft at the most retarded end and the exhaust camshaft at the most advanced end to ensure that the engine starts properly.

(e) An advance assist spring is provided on the exhaust side VVT-i controller. This spring applies torque in the advance direction when the engine is stopped, thus ensuring the engagement of the lock pin.

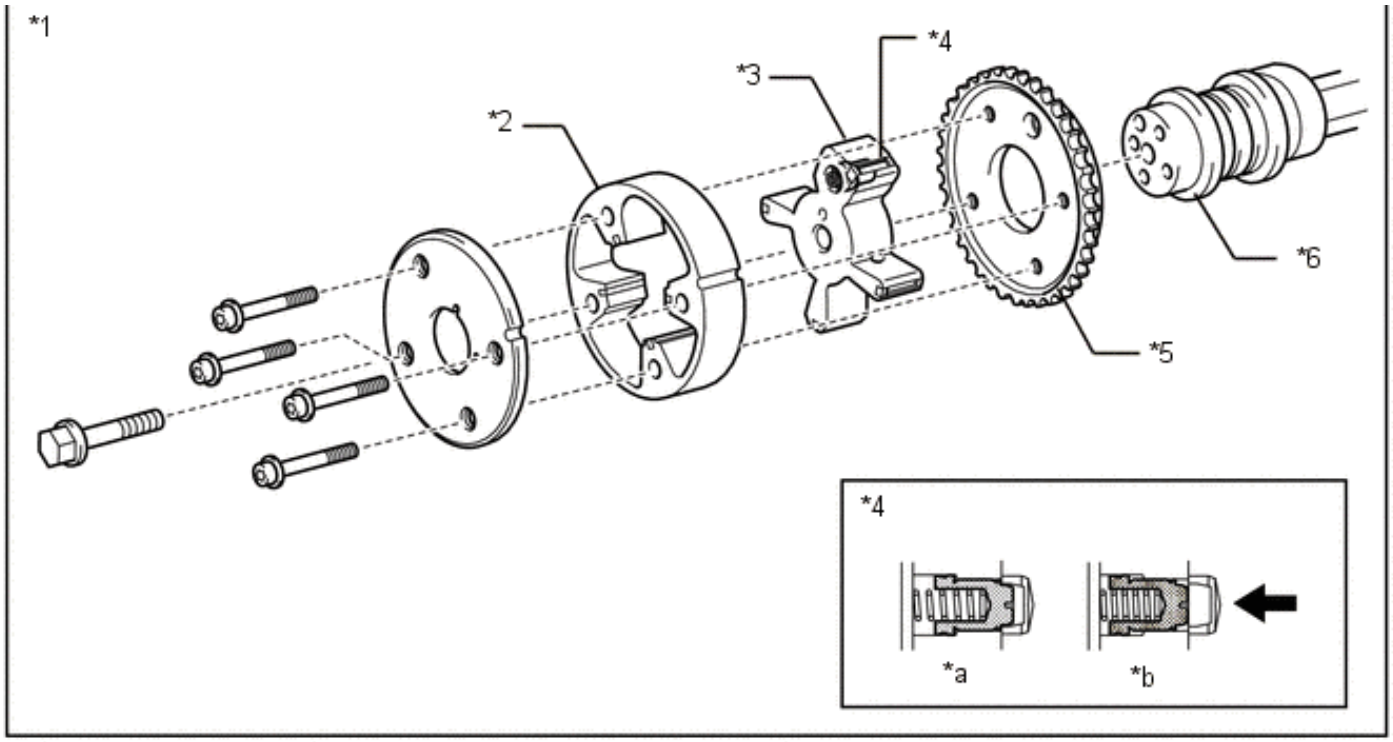


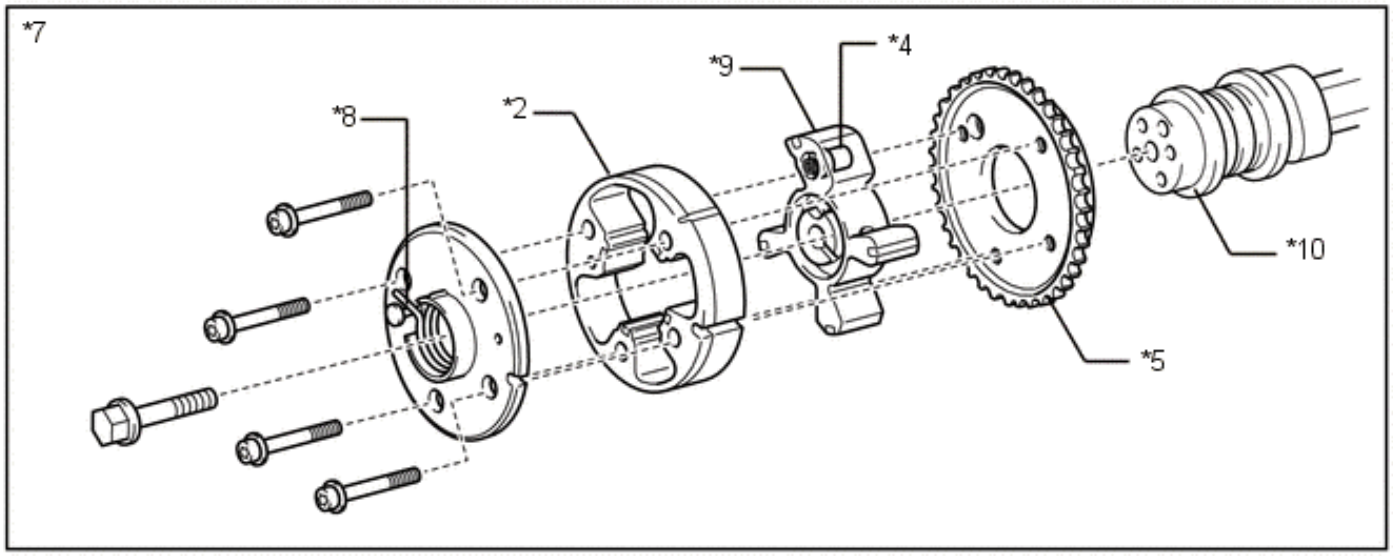


| | | | |
|---|---|---|---|
| *1 | Intake Side VVT-i Controller | *2 | Housing |
| *3 | Vane (Fixed on Intake Camshaft) | *4 | Lock Pin |
| *5 | Sprocket | *6 | Intake Camshaft |
| *7 | Exhaust Side VVT-i Controller | *8 | Advance Assist Spring |
| *9 | Vane (Fixed on Exhaust Camshaft) | *10 | Exhaust Camshaft |
| *a | At a Stop | *b | In Operation |
| ➡ | Oil Pressure | - | - |