| | | |
|---|---|---|
| **Last Modified:** 03-12-2013 | 6.4 F | **Doc ID:** NM1000000005II5 |
| **Model Year:** 2013 | **Model:** RAV4 | **Prod Date Range:** [12/2012 - ] |
| **Title:** HEATING / AIR CONDITIONING: AIR CONDITIONING SYSTEM: AIR CONDITIONING UNIT; 2013 MY RAV4 [12/2012 - ] | | |

# AIR CONDITIONING UNIT

## 1. CONSTRUCTION

(a) The air conditioning unit consists of a No. 1 cooler evaporator sub-assembly, heater radiator unit sub-assembly, servomotors, No. 1 cooler thermistor, quick heater assembly and blower assembly.

(b) A semi-center location air conditioning unit, in which the No. 1 cooler evaporator sub-assembly and heater radiator unit sub-assembly are placed in the vehicle's longitudinal direction, is used.

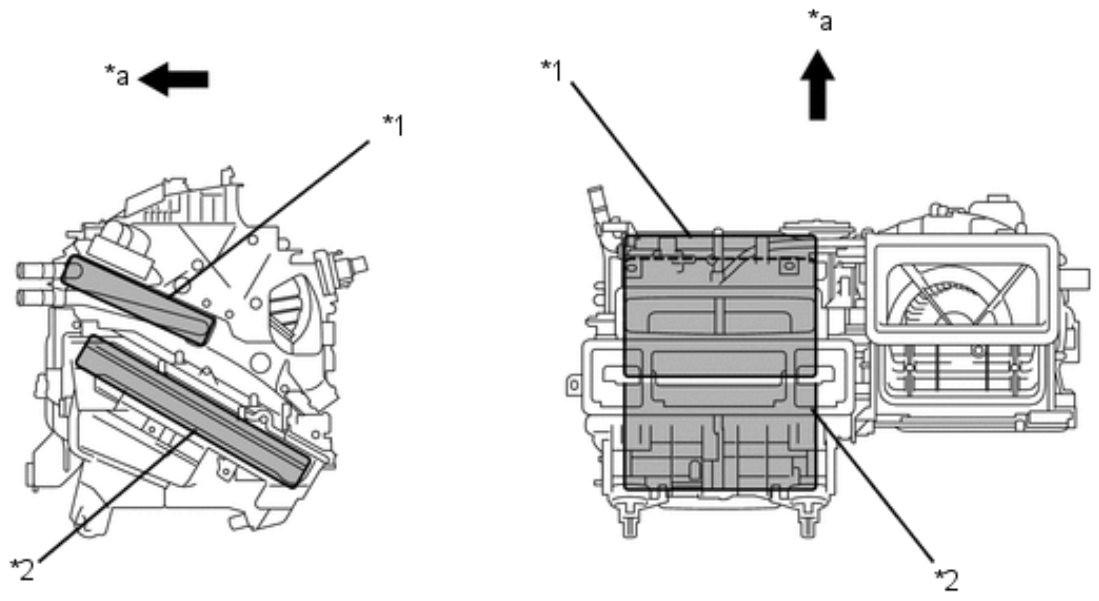


| | | | |
|---|---|---|---|
| *1 | Heater Radiator Unit Sub-assembly | *2 | No. 1 Cooler Evaporator Sub-assembly |
| *a | Front | - | - |

(c) A partial recirculation system is used. This system has an air inlet control door (sub) in the cabin side of the air inlet duct. Thus, it is able to cycle a small volume of recirculated air even in the FRESH mode, thus enhancing heating performance. When the blower switch is on, the suction force of the blower fan opens this air inlet control door (sub).

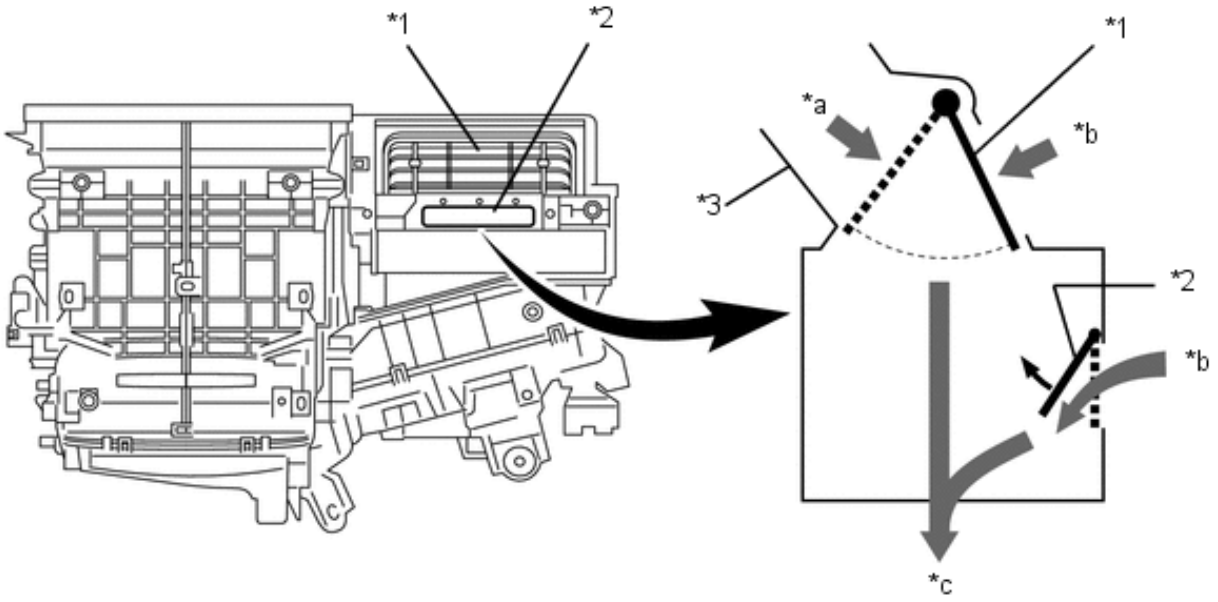


| | | | |
|---|---|---|---|
| *1 | Air Inlet Control Door | *2 | Air Inlet Control Door (Sub) |
| *3 | Air Inlet Duct | - | - |
| *a | Fresh Air | *b | Recirculated Air |
| *c | To Blower Fan | - | - |