| | | |
|---|---|---|
| **Last Modified:** 03-12-2013 | 6.4 F | **Doc ID:** NM1000000005G0E |
| **Model Year:** 2013 | **Model:** RAV4 | **Prod Date Range:** [12/2012 - ] |
| **Title:** NETWORKING: LIN COMMUNICATION SYSTEM: PARTS LOCATION; 2013 MY RAV4 [12/2012 - ] | | |

# PARTS LOCATION

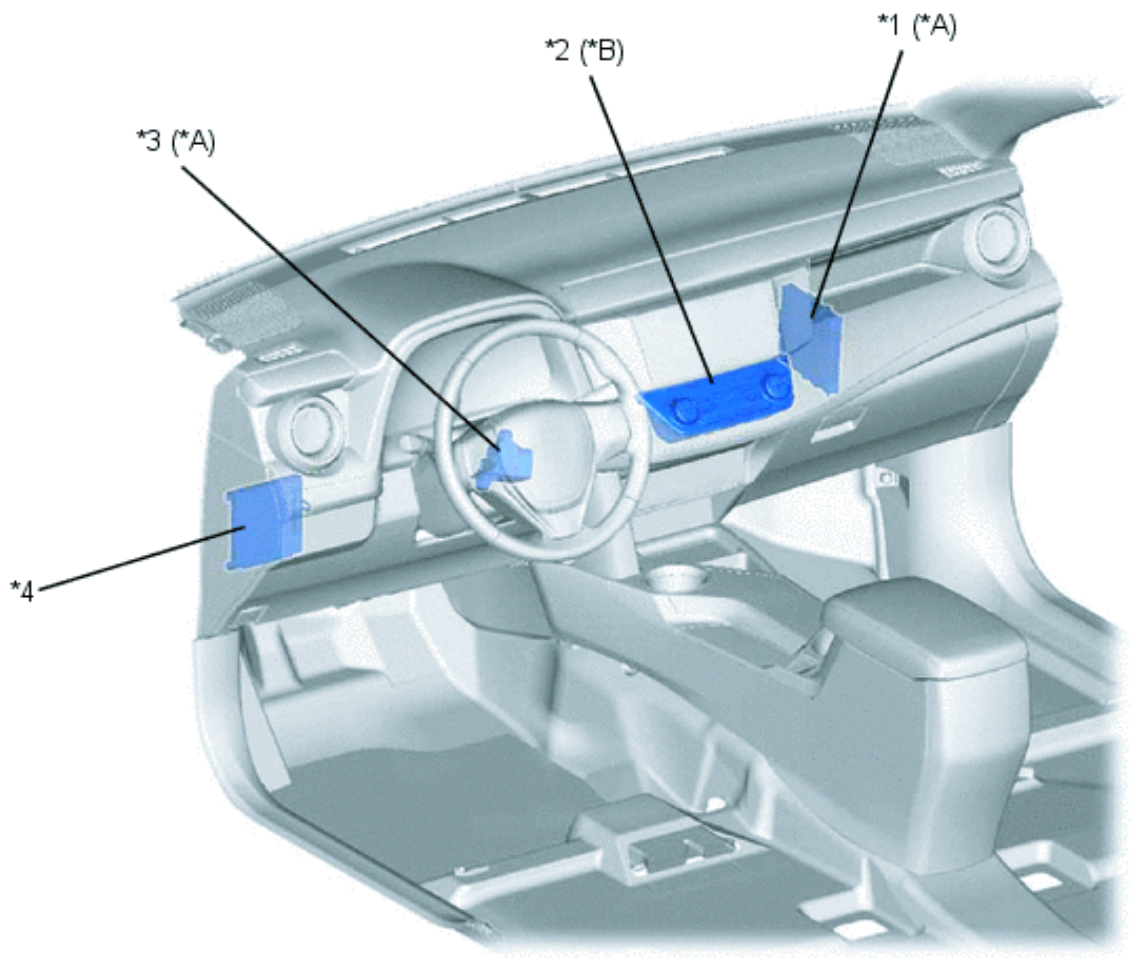


Y

| | | | |
|---|---|---|---|
| *A | Models with Smart Key System | *B | Models with Automatic Air Conditioning System |
| *1 | Certification ECU (Smart Key ECU Assembly) | *2 | Air Conditioning Control Assembly |
| *3 | Steering Lock ECU | *4 | Main Body ECU (Multiplex Network Body ECU) |

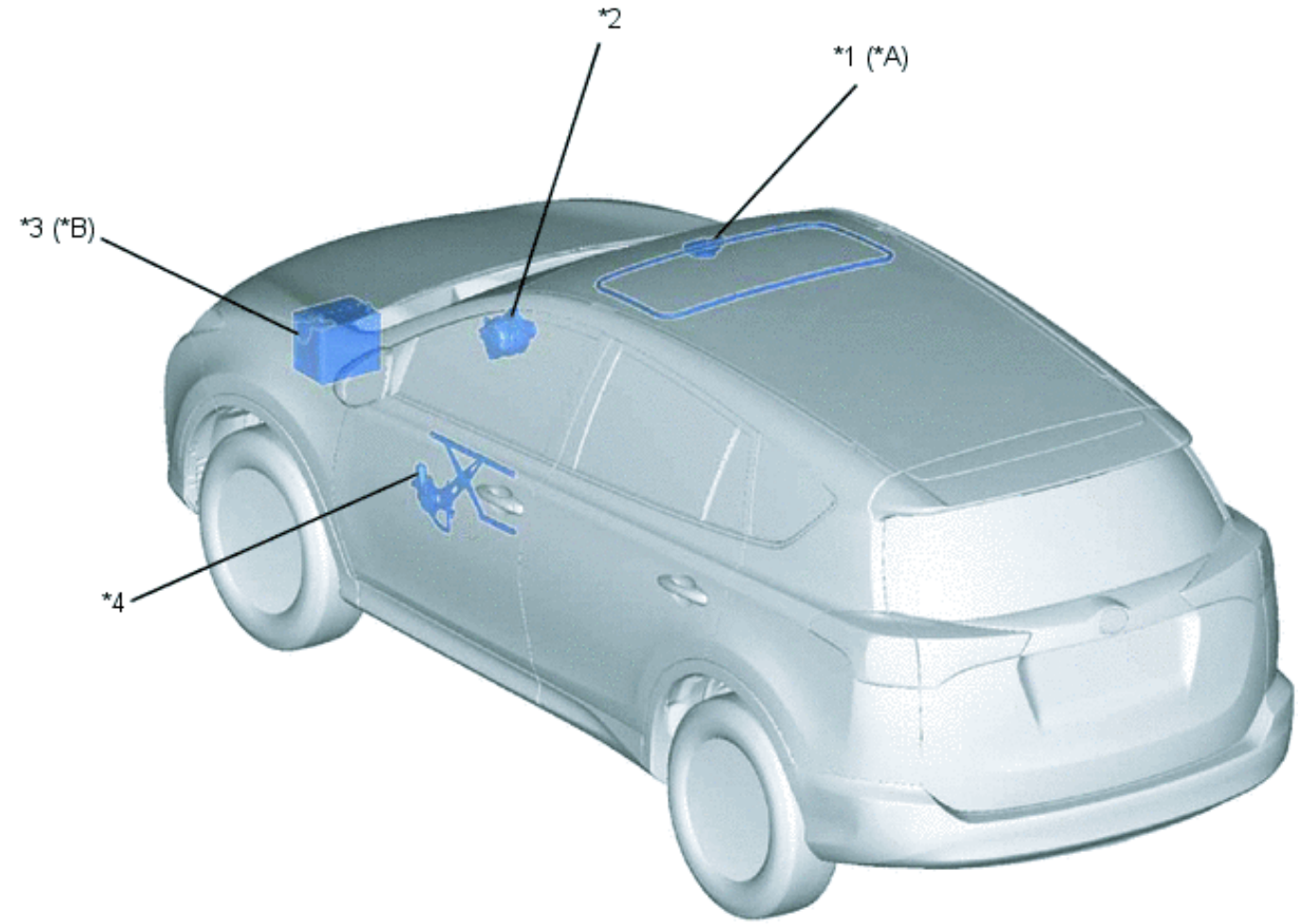


Y

| | | | |
|---|---|---|---|
| *A | Models with Sliding Roof System | *B | 2WD Models with 2AR-FE Engine |
| *1 | Sliding Roof Control ECU | *2 | Generator Assembly |
| *3 | Generator Control ECU Assembly | *4 | Driver Side Power Window Regulator Motor Assembly |