| | | |
|---|---|---|
| **Last Modified:** 03-12-2013 | 6.4 F | **Doc ID:** NM1000000005PUY |
| **Model Year:** 2013 | **Model:** RAV4 | **Prod Date Range:** [12/2012 - ] |
| **Title:** POWER ASSIST SYSTEMS: POWER STEERING SYSTEM: REDUCTION MECHANISM; 2013 MY RAV4 [12/2012 - ] | | |

# REDUCTION MECHANISM

## 1. CONSTRUCTION

(a) This mechanism reduces the speed of the power steering motor via the worm gear and the wheel gear, and transmits it to the column shaft.

(b) The wheel gear is made of a high strength, low friction and low wear plastic material, thus achieving low noise and a lightweight construction.

(c) A worm gear supported by ball bearings is used. Also, a torsion spring is provided to ensure the optimal meshing of the gears at all times.

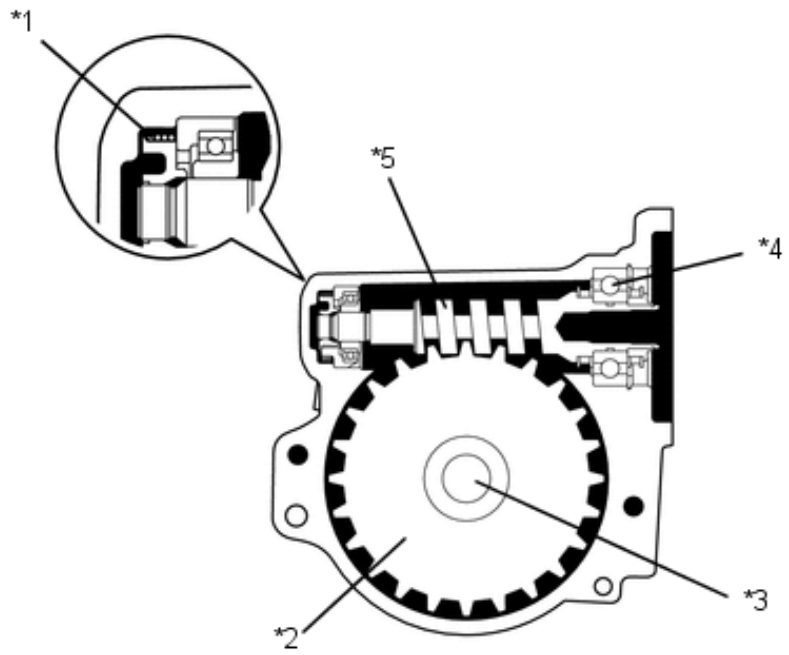


Y

| | | | |
|---|---|---|---|
| *1 | Torsion Spring | *2 | Wheel Gear |
| *3 | Column Shaft | *4 | Ball Bearing |
| *5 | Worm Gear | - | - |