| | | |
|---|---|---|
| **Last Modified:** 03-12-2013 | 6.4 F | **Doc ID:** NM1000000004HBX |
| **Model Year:** 2013 | **Model:** RAV4 | **Prod Date Range:** [12/2012 - ] |
| **Title:** 2AR-FE ENGINE CONTROL: SFI SYSTEM: THROTTLE POSITION SENSOR; 2013 MY RAV4 [12/2012 - ] | | |

# THROTTLE POSITION SENSOR

## 1. CONSTRUCTION
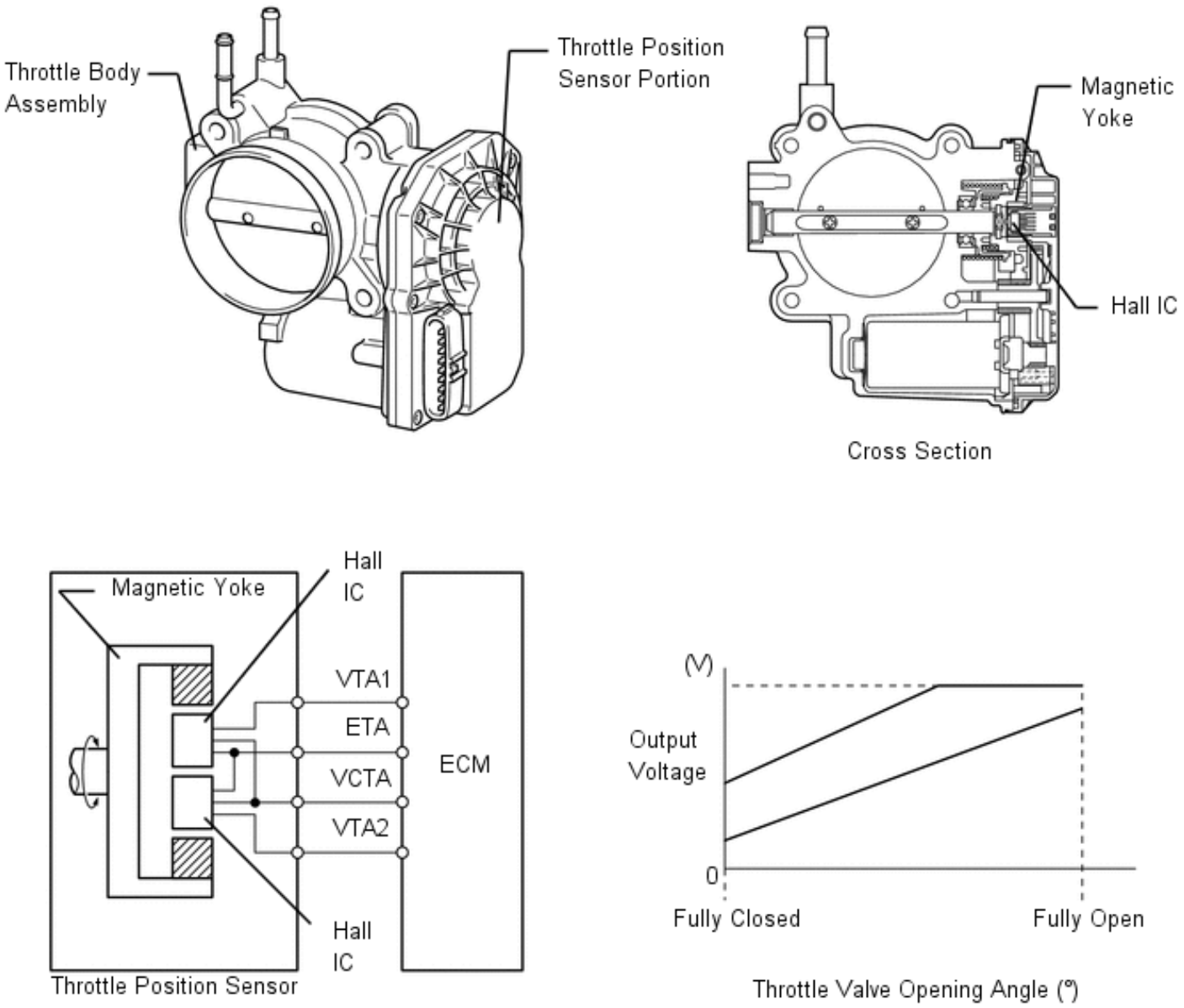
(a) The throttle position sensor is mounted on the throttle body assembly to detect the opening angle of the throttle valve. The throttle position sensor converts the magnetic flux density that changes when the magnetic yoke (located on the same axis as the throttle shaft) rotates around the Hall IC into electric signals to operate the throttle control motor.