| | | |
|---|---|---|
| **Last Modified:** 03-12-2013 | 6.4 F | **Doc ID:** NM1000000005FYT |
| **Model Year:** 2013 | **Model:** RAV4 | **Prod Date Range:** [12/2012 - ] |
| **Title:** DOOR / HATCH: POWER BACK DOOR SYSTEM: SYSTEM DIAGRAM; 2013 MY RAV4 [12/2012 - ] | | |

# SYSTEM DIAGRAM

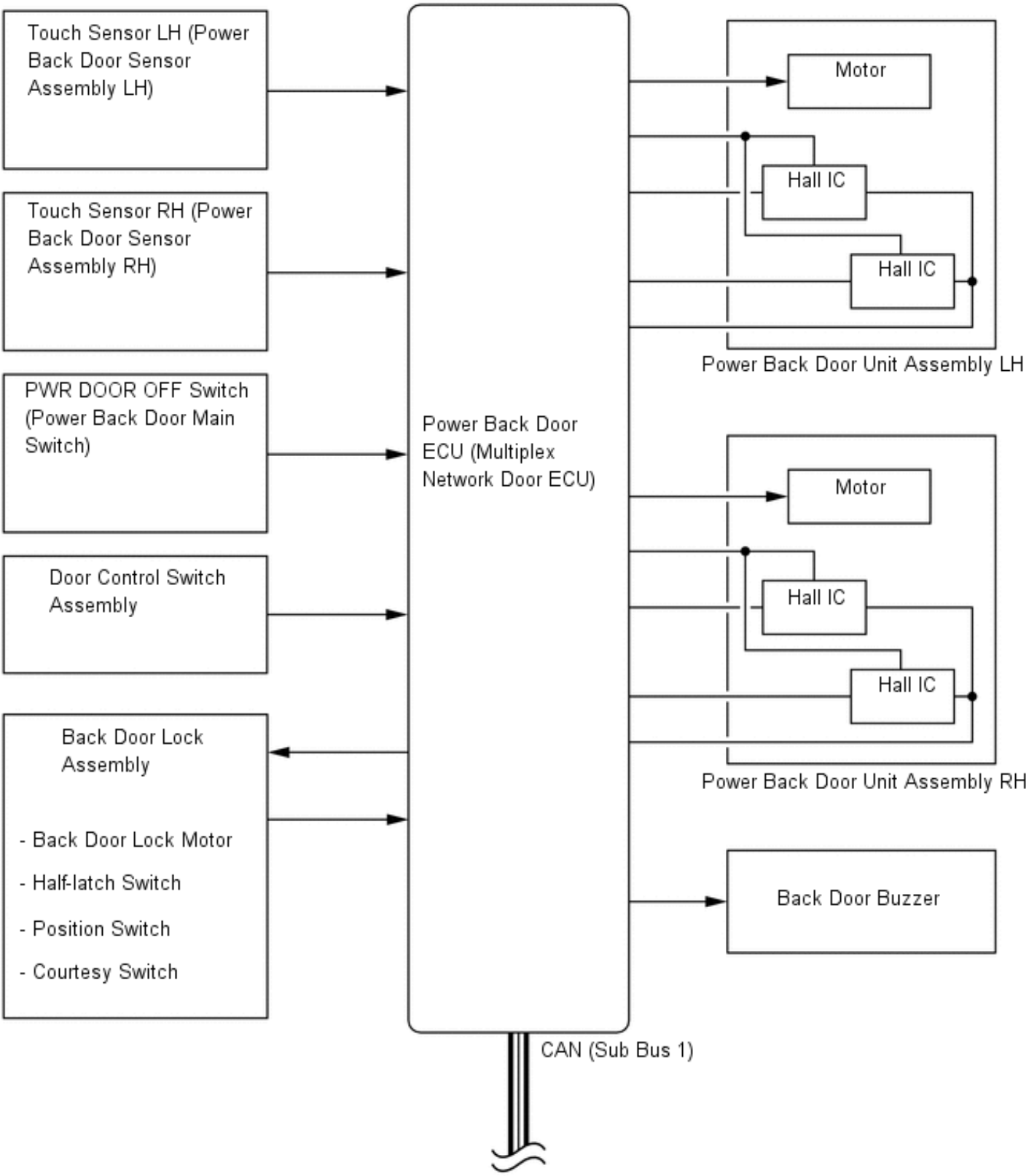
Touch Sensor LH (Power Back Door Sensor Assembly LH)
Touch Sensor RH (Power Back Door Sensor Assembly RH)
PWR DOOR OFF Switch (Power Back Door Main Switch)
Door Control Switch Assembly
Back Door Lock Assembly
- Back Door Lock Motor
- Half-latch Switch
- Position Switch
- Courtesy Switch
Power Back Door ECU (Multiplex Network Door ECU)
Motor
Hall IC
Hall IC
Power Back Door Unit Assembly LH
Motor
Hall IC
Hall IC
Power Back Door Unit Assembly RH
Back Door Buzzer
CAN (Sub Bus 1)

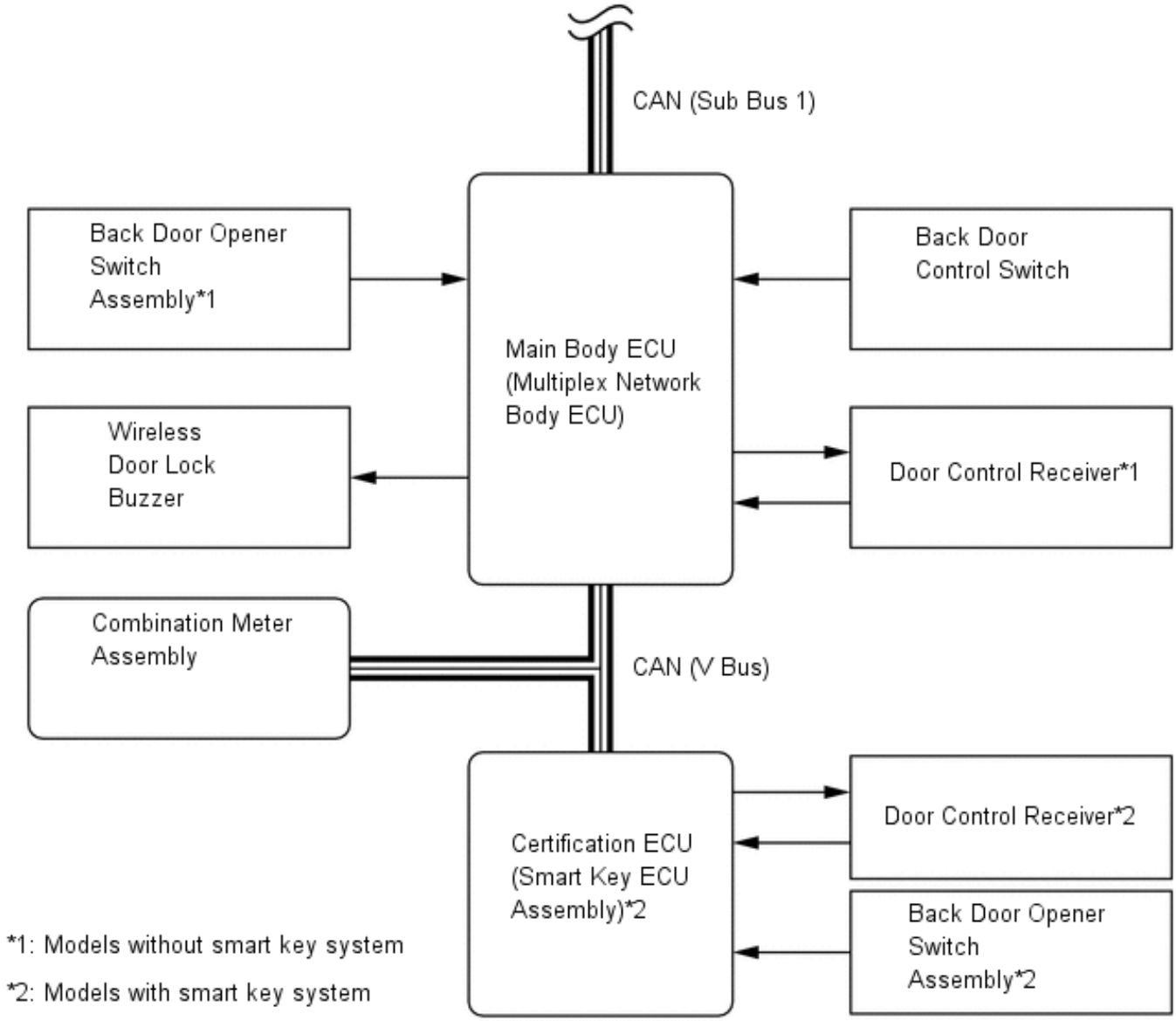
CAN (Sub Bus 1)
Back Door Opener Switch Assembly*1
Main Body ECU (Multiplex Network Body ECU)
Back Door Control Switch
Wireless Door Lock Buzzer
Door Control Receiver*1
Combination Meter Assembly
CAN (V Bus)
Certification ECU (Smart Key ECU Assembly)*2
Door Control Receiver*2
Back Door Opener Switch Assembly*2
*1: Models without smart key system
*2: Models with smart key system