| | | |
|---|---|---|
| **Last Modified:** 03-12-2013 | 6.4 F | **Doc ID:** NM1000000005H38 |
| **Model Year:** 2013 | **Model:** RAV4 | **Prod Date Range:** [12/2012 - ] |
| **Title:** EXTERIOR PANELS / TRIM: BODY STRUCTURE: GENERAL; 2013 MY RAV4 [12/2012 - ] | | |

# GENERAL

## 1. OUTLINE

(a) Lightweight and Highly Rigid Body

(1) High-strength steel and ultra high-strength steel are used in order to achieve excellent body rigidity and a lightweight body.

(b) Safety Features

(1) The impact absorbing structure minimizes cabin deformation by effectively helping to absorb the impact energy in the event of a front, side or rear collision. This provides high performance occupant protection.

(c) Rust-resistant Body

(1) Rust-resistant performance is enhanced by the extensive use of anti-corrosion sheet steel, as well as by an anti-corrosion treatment that includes the application of anti-rust wax, sealer and anti-chipping paint to the easily corroded parts such as the hood and fender.

(d) Low Vibration and Low Noise Body

(1) Effective application of vibration damping and noise suppressant materials reduces engine, wind and road noise.

(e) Aerodynamics

(1) Various types of airflow routing parts that control airflow are provided under the floor, and an undercover is provided to make the under-floor area flat in order to ensure excellent aerodynamic performance.

## 2. MAIN FEATURES

(a) Exterior Design

(1) Front View

1. An integrated design from the hood to the front bumper, which emphasizes a protruding center, is used to express a sophisticated dynamism.
2. The design surrounding the radiator grille garnish sub-assembly, which emphasizes the center indicated by the TOYOTA logo, and the design, which emphasizes the eyebrowshaped plate molding passing through the headlight assembly from the radiator grille garnish sub-assembly and the projector lights positioned on the outermost sides, are given to add sharpness to the keen look (which is Toyota's original look giving an intelligent and clear impression created by the combination of the dynamic under priority and the emphasis of the engine hood directed toward the TOYOTA logo). (A, C and D in the illustration)
3. The front bumper is a 2-piece structure consisting of 2 parts of different colors. One color is the same as the outer panel and the other color is the same color as the substrate. This emphasizes the trapezoidal shape surrounding the front bumper opening. In addition to an appealing dynamism which is appropriate for an SUV, the under priority design (a front design which further emphasizes the undergrille and which takes into account aerodynamic performance, cooling and increased protection for pedestrians) has been expressed in a clear manner. (C in the illustration)
4. The sharp and edgy contrast created using machined concaved areas in the convex surfaces pursues a high contrast and dynamic texture and achieves a satisfying and dynamistic design. (D in the illustration)
5. By raising the lower end of the front bumper and using a design which creates a larger approach angle, a light and mobile design is achieved. (B in the illustration)

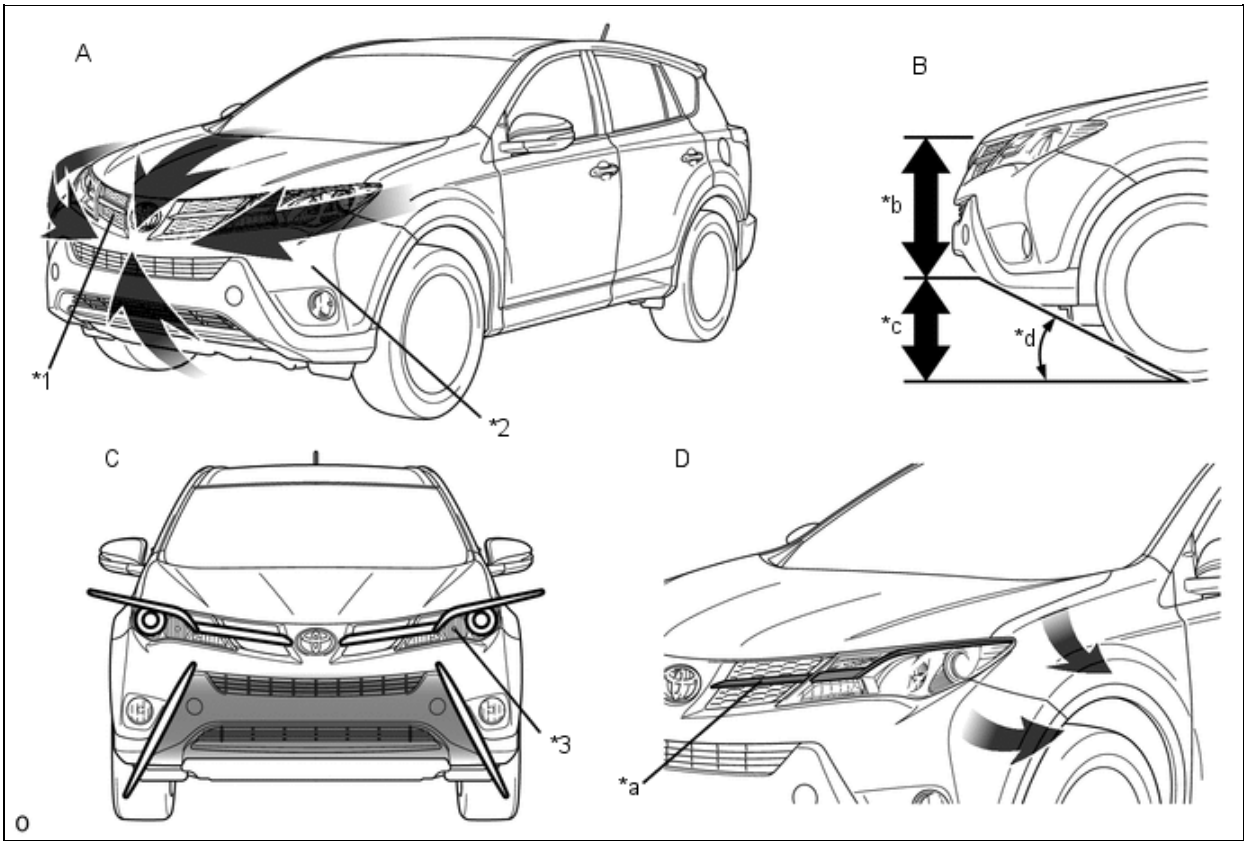


| | | | |
|---|---|---|---|
| *1 | Radiator Grille Garnish Sub-assembly | *2 | Front Bumper |
| *3 | Headlight Assembly | - | - |
| *a | Plate Molding | *b | Thinner |
| *c | Higher | *d | Large Approach Angle |

(2) Rear View

1. When viewed directly from behind, the vehicle expresses a stable stance and a wide look by the contrast of the tighter cabin, which gets narrower approaching the rear for improved aerodynamic performance, with the underbody, which protrudes outward. (A in the illustration)
2. The rear view has been given a dynamic, light feeling through the use of a design utilizing a lively character line which fits with the side design, and through a rolling effect which smoothly alternates between concave and convex portions. (B in the illustration)
3. By using a spare tire which can be stored in the cabin, the back door has been made to open vertically. As a result, a stylish rear view has been achieved. (A and B in the illustration)

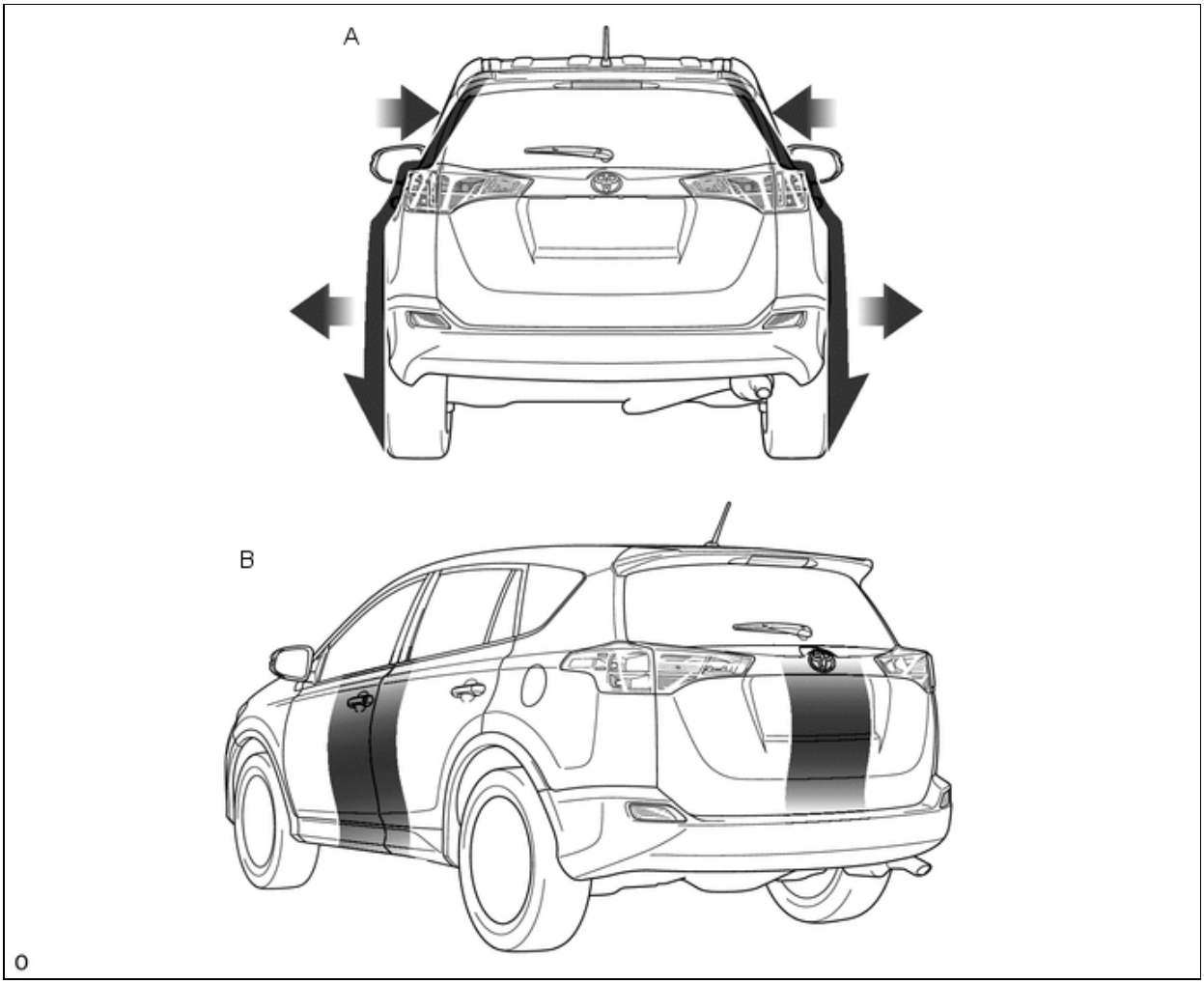


4. A horizontal light shape which stands out and matches the character line of the side and rear body panels emphasizes a design which sweeps sharply along the sides and also emphasizes the wide look of the rear view.

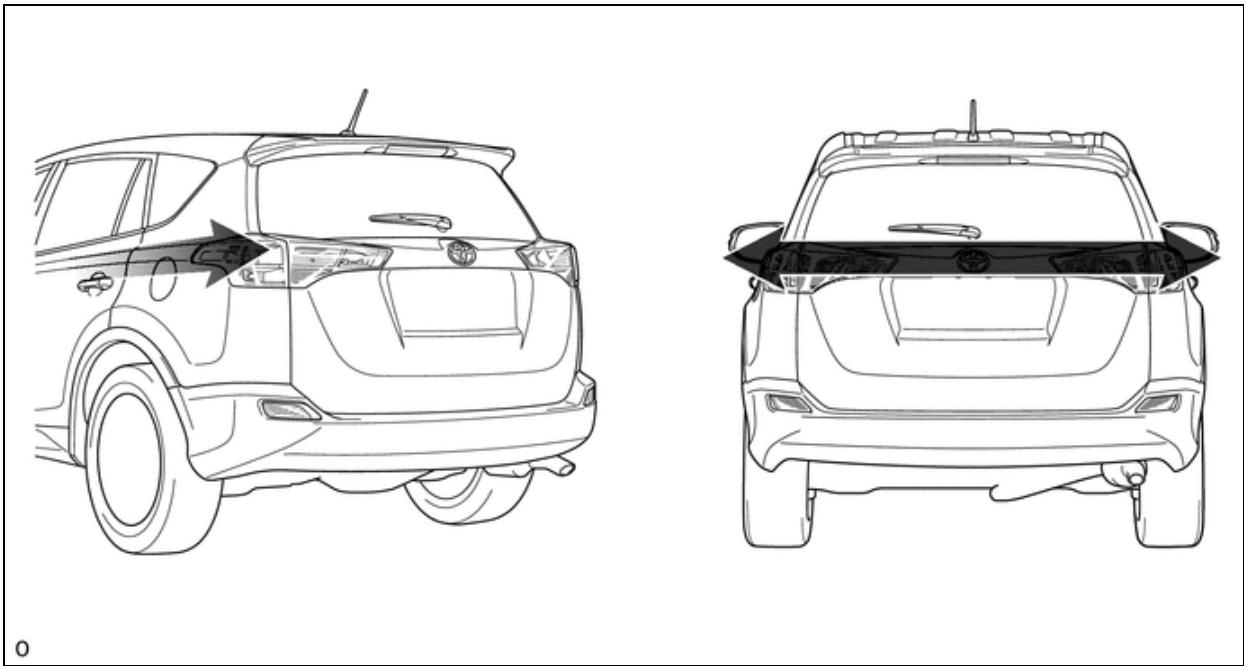

(3) Side View

1. A black front fender molding sub-assembly, front door molding sub-assembly outside lower, rear door outside lower molding sub-assembly and quarter outside molding sub-assembly are used while also ensuring a sufficient interior space. As a result, it makes the side silhouette less apparent and achieves a sleek proportional look while also

making the tires look relatively larger. In addition, the front and rear overhangs have been made to stand out to express a light dynamism. (A in the illustration)

2. SUS* molding (front door belt molding assembly and rear door belt molding assembly) is used for the door belt line, thus achieving a luxurious look. (A in the illustration)

   * S(Steel) U(Use) S(Stainless)

3. While incorporating an optimized roof line and inclination angle of the back window, which were created based on aerodynamic know-how, a strong and active feeling of unity is expressed by the flowing, sleek spindle shaped silhouette created by the character line which seems to extend outwards and the easily visible side windows which appear seamless. (B in the illustration)
4. The sharp and edgy contrast created by machined concaved areas in the convex surfaces and the large surface which alternates between convex and concave pursue a high contrast and dynamic texture and achieve a satisfying and dynamistic design. (C in the illustration)

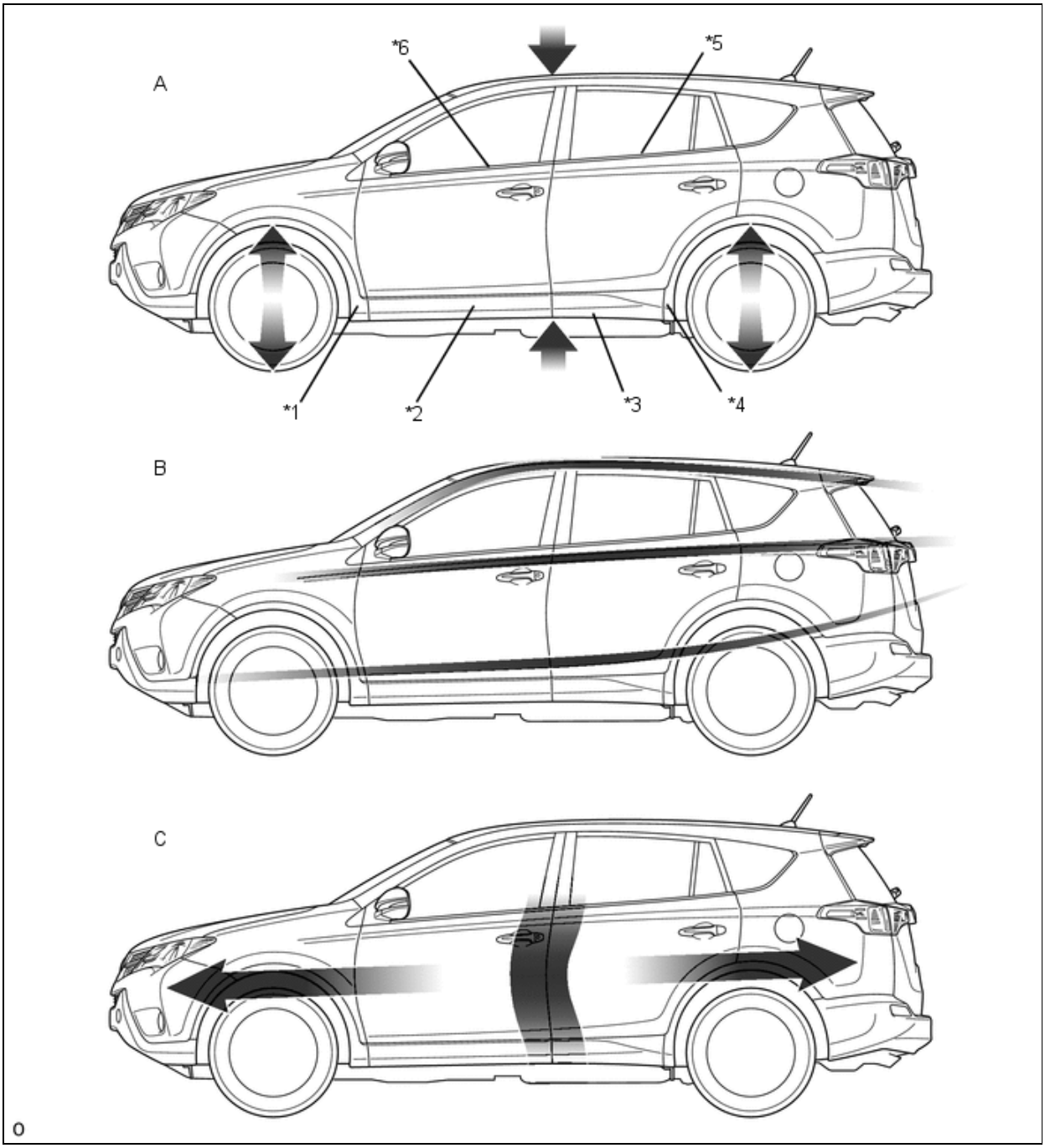


| | | | |
|---|---|---|---|
| *1 | Front Fender Molding Sub-assembly | *2 | Front Door Molding Sub-assembly Outside Lower |
| *3 | Rear Door Outside Lower Molding Sub-assembly | *4 | Quarter Outside Molding Sub-assembly |
| | | | |

| | | | |
|---|---|---|---|
| *5 | Rear Door Belt Molding Assembly | *6 | Front Door Belt Molding Assembly |