| | | |
|---|---|---|
| **Last Modified:** 03-12-2013 | 6.4 F | **Doc ID:** NM1000000004HCY |
| **Model Year:** 2013 | **Model:** RAV4 | **Prod Date Range:** [12/2012 - ] |
| **Title:** 2AR-FE ENGINE MECHANICAL: ENGINE UNIT: V-RIBBED BELT; 2013 MY RAV4 [12/2012 - ] | | |

# V-RIBBED BELT

## 1. CONSTRUCTION

(a) Accessory components are driven by a serpentine belt consisting of a single V-ribbed belt. It reduces the overall engine length, weight and the number of engine parts.

(b) An automatic V-ribbed belt tensioner assembly eliminates the need for tension adjustment.

| | | | |
|---|---|---|---|
| *1 | Idler Pulley (V-ribbed Belt Tensioner Assembly) | *2 | Crankshaft Pulley |
| *3 | Air Conditioning Compressor Pulley | *4 | Water Pump Pulley |
| *5 | Alternator Pulley | - | - |

(c) The tension of the V-ribbed belt is properly maintained by the tension spring enclosed in the V-ribbed belt tensioner assembly.

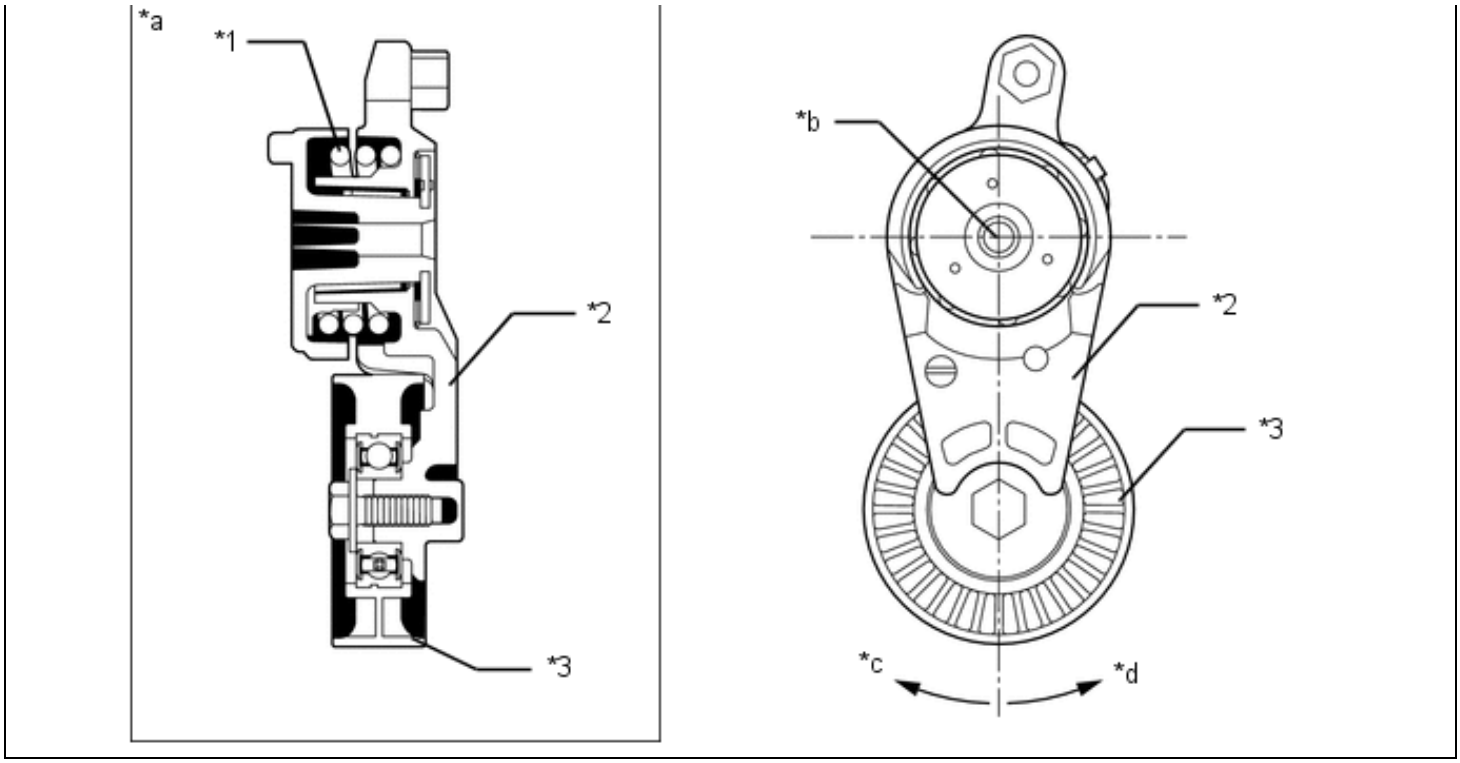


| | | | |
|---|---|---|---|
| *1 | Spring | *2 | Arm |
| *3 | Idler Pulley | - | - |
| *a | Cross Section | *b | Fulcrum |
| *c | Belt Loosen Direction | *d | Belt Tension Direction |