| | | |
|---|---|---|
| **Last Modified:** 03-12-2013 | 6.4 F | **Doc ID:** NM1000000005H34 |
| **Model Year:** 2013 | **Model:** RAV4 | **Prod Date Range:** [12/2012 - ] |
| **Title:** EXTERIOR PANELS / TRIM: BODY STRUCTURE: LIGHTWEIGHT AND HIGHLY RIGID BODY; 2013 MY RAV4 [12/2012 - ] | | |

# LIGHTWEIGHT AND HIGHLY RIGID BODY

### 1. CONSTRUCTION

(a) High-tensile strength steel and ultra high-tensile strength steel are used in order to achieve excellent body rigidity and a lightweight body.

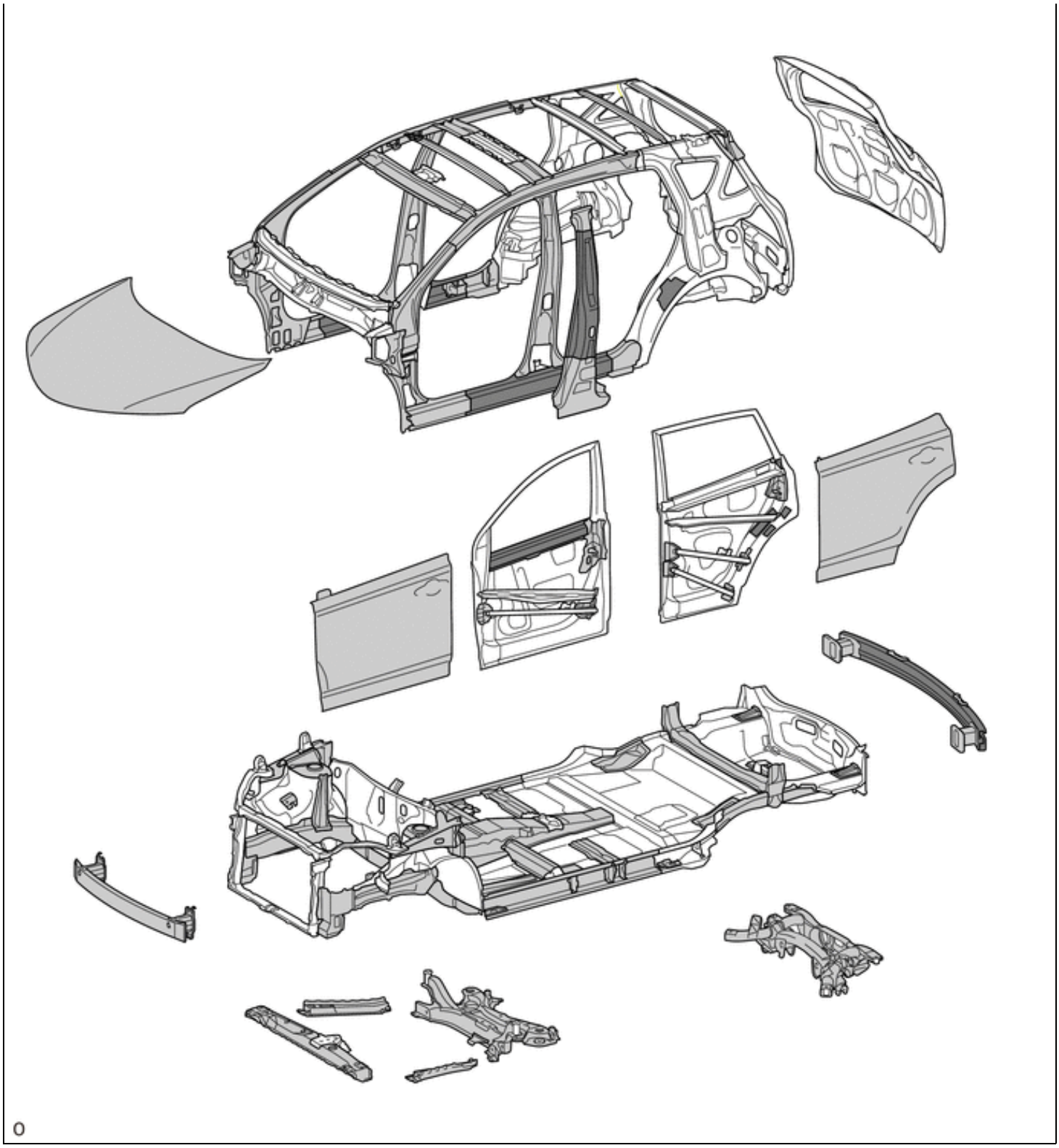


| | | | |
|---|---|---|---|
| | Ultra High-tensile Strength Steel | | High-tensile Strength Steel |