| | | |
|---|---|---|
| **Last Modified:** 03-12-2013 | 6.4 F | **Doc ID:** NM1000000004HDS |
| **Model Year:** 2013 | **Model:** RAV4 | **Prod Date Range:** [12/2012 - ] |
| **Title:** 2AR-FE LUBRICATION: LUBRICATION SYSTEM: OIL FILTER; 2013 MY RAV4 [12/2012 - ] | | |

# OIL FILTER

## 1. CONSTRUCTION

(a) An oil filter with a replaceable element is used. The element uses high-performance filter paper to improve filtration performance. It is also combustible for environmental protection.

(b) A plastic filter cap is used for weight reduction.

(c) This oil filter has a structure which can drain the engine oil remaining in the oil filter. This prevents engine oil from spattering when replacing the element and allows the technician to work without touching hot engine oil.

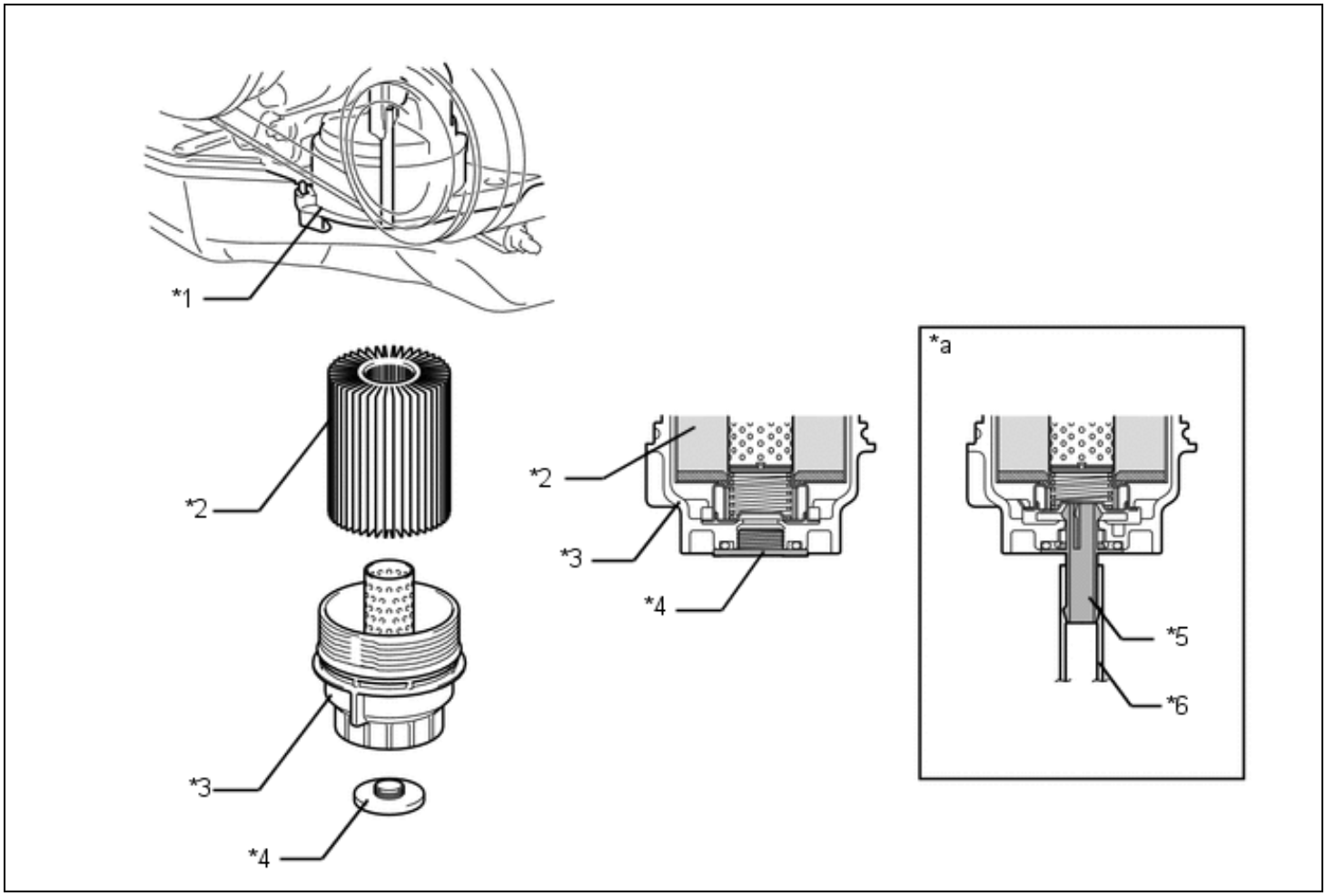


| | | | |
|---|---|---|---|
| *1 | Oil Filter Bracket | *2 | Element |
| *3 | Oil Filter Cap | *4 | Drain Plug |
| *5 | Drain Pipe | *6 | Hose (Inside Diameter: 15 mm (0.59 in.)) |
| *a | When Draining Engine Oil | - | - |

**HINT:**

- The engine oil in the oil filter can be drained by removing the drain plug and inserting the drain pipe supplied

with the element into the oil filter.

- The engine oil maintenance interval for a model that has an oil filter with a replaceable element is the same as that for the conventional model.