| | | |
|---|---|---|
| **Last Modified:** 03-12-2013 | 6.4 F | **Doc ID:** NM1000000005PTX |
| **Model Year:** 2013 | **Model:** RAV4 | **Prod Date Range:** [12/2012 - ] |
| **Title:** FRONT SUSPENSION: FRONT SUSPENSION SYSTEM: SHOCK ABSORBER; 2013 MY RAV4 [12/2012 - ] | | |

# SHOCK ABSORBER

## 1. CONSTRUCTION

(a) A low-pressure ($N_2$) gas sealed front shock absorber assembly is used to achieve both driving stability and riding comfort.

(b) Internal friction has been reduced, thus allowing the absorber rod to move smoothly.

(c) The initial characteristic of the rebound stopper is set soft in order to ensure comfort when driving over a bump.

**HINT:**

To prevent hazardous conditions, make sure to empty the gas from the front shock absorber assembly before discarding the low-pressure ($N_2$) gas sealed in the front shock absorber assembly. For details, refer to the Repair Manual.

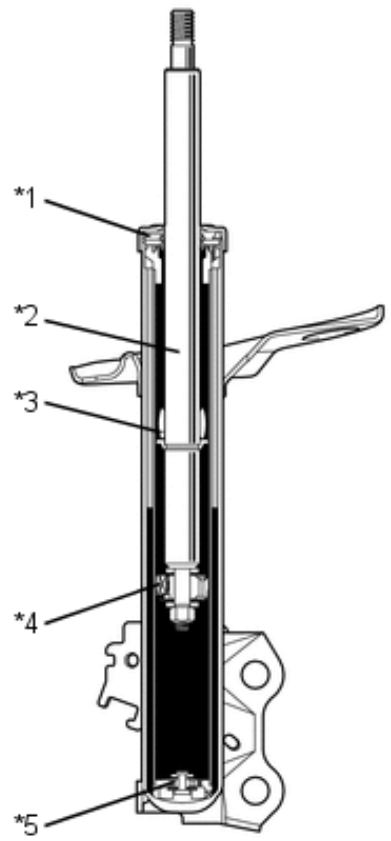


| | | | |
|---|---|---|---|
| *1 | Oil Seal | *2 | Absorber Rod |
| *3 | Rebound Stopper | *4 | Piston Valve |
| *5 | Base Valve | - | - |
| | | | |

| | | | |
|---|---|---|---|
| | Oil | | Low-pressure ($N_2$) Gas |