| | | |
|---|---|---|
| **Last Modified:** 03-12-2013 | 6.4 F | **Doc ID:** NM1000000005PTR |
| **Model Year:** 2013 | **Model:** RAV4 | **Prod Date Range:** [12/2012 - ] |
| **Title:** DRIVE SHAFT / PROPELLER SHAFT: DRIVE SHAFT SYSTEM: GENERAL; 2013 MY RAV4 [12/2012 - ] | | |

# GENERAL

## 1. OUTLINE

(a) Front Drive Shaft

(1) A tripod type Constant-Velocity Joint (CVJ) is used on the front differential side, and a Rzeppa type CVJ is used on the front axle side.

(2) A dynamic damper is provided to reduce vibration and noise.

### TMC Made with U760E Automatic Transaxle

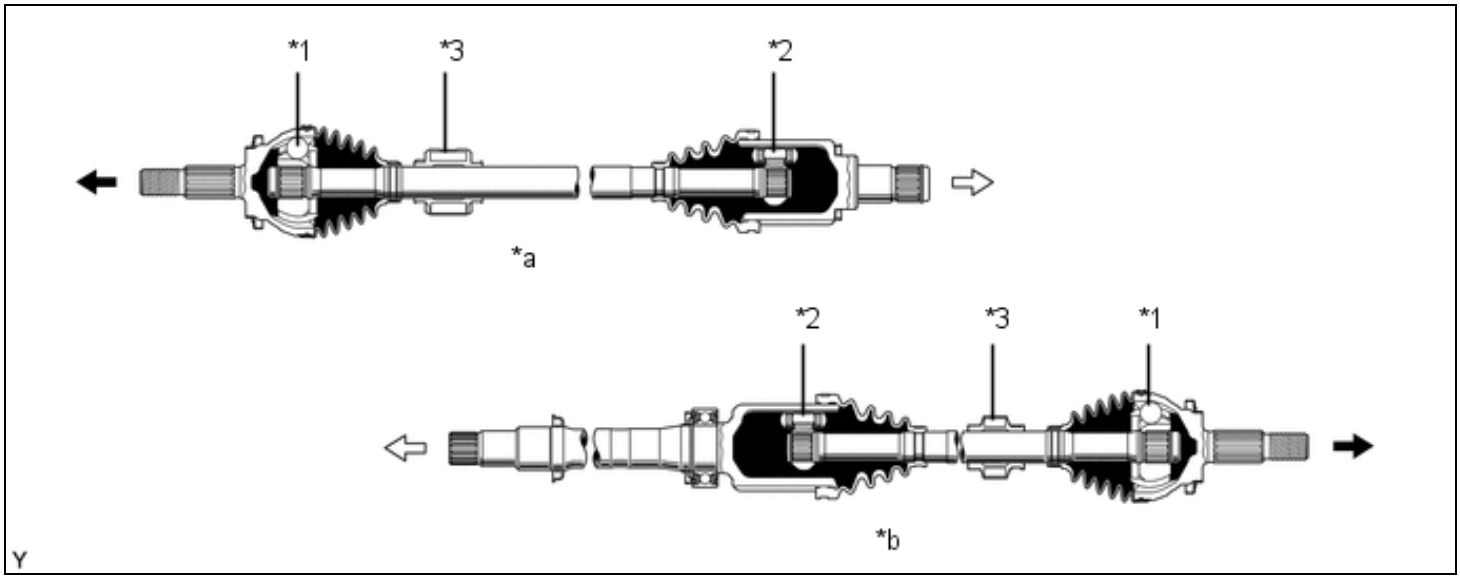


| | | | |
|---|---|---|---|
| *1 | Rzeppa Type CVJ | *2 | Tripod Type CVJ |
| *3 | Dynamic Damper | - | - |
| *a | LH Side | *b | RH Side |
| ➡ | Front Axle Side | ⇨ | Front Differential Side |

### TMC Made with U760F Automatic Transaxle

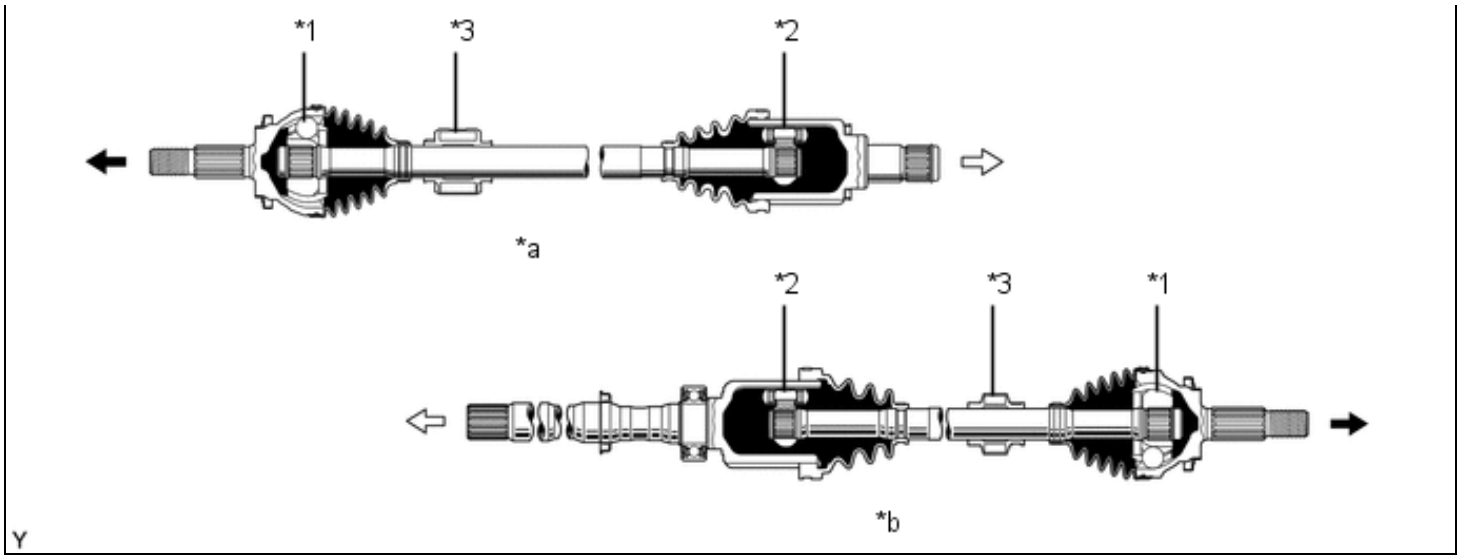


| | | | |
|---|---|---|---|
| *1 | Rzeppa Type CVJ | *2 | Tripod Type CVJ |
| *3 | Dynamic Damper | - | - |
| *a | LH Side | *b | RH Side |
| ➡ | Front Axle Side | ⇨ | Front Differential Side |

**TMMC Made with U760E Automatic Transaxle**

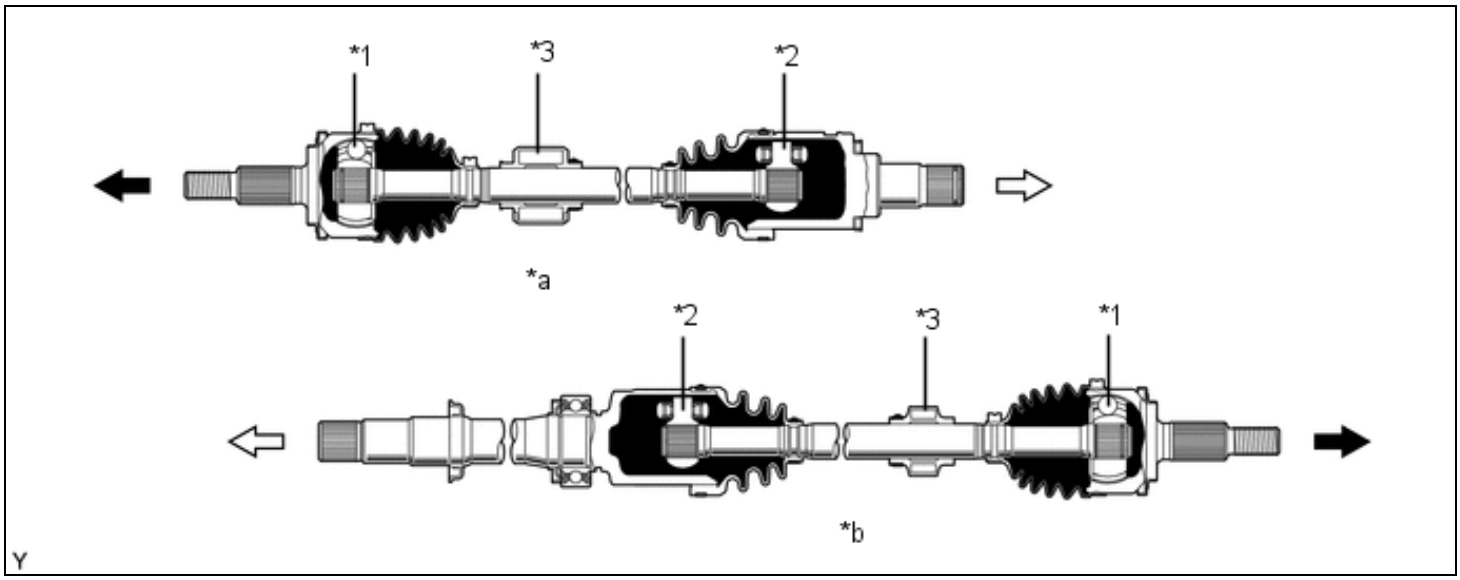


| | | | |
|---|---|---|---|
| *1 | Rzeppa Type CVJ | *2 | Tripod Type CVJ |
| *3 | Dynamic Damper | - | - |
| *a | LH Side | *b | RH Side |
| ➡ | Front Axle Side | ⇨ | Front Differential Side |

| | | | |
|---|---|---|---|
| ➡ | | ⇨ | |

**TMMC Made with U760F Automatic Transaxle**

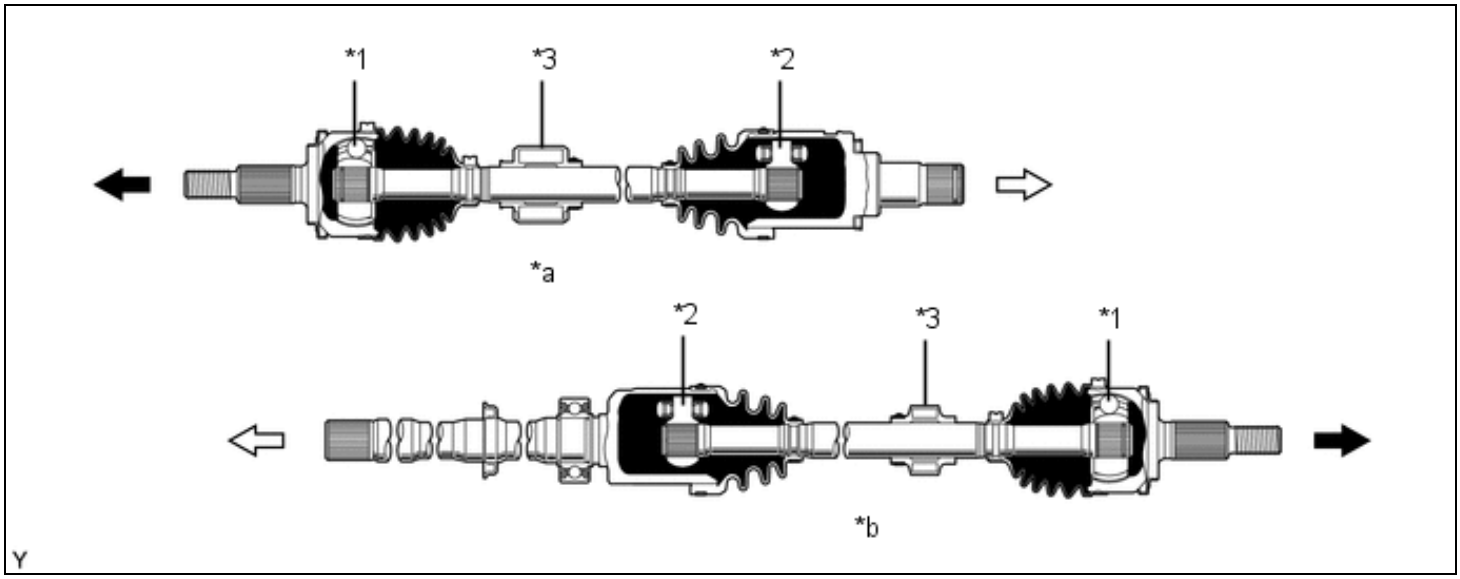


| | | | |
|---|---|---|---|
| *1 | Rzeppa Type CVJ | *2 | Tripod Type CVJ |
| *3 | Dynamic Damper | - | - |
| *a | LH Side | *b | RH Side |
| ➡ | Front Axle Side | ⇨ | Front Differential Side |

(b) Rear Drive Shaft (AWD Models)

(1) A tripod type Constant-Velocity Joint (CVJ) is used on the rear differential side, and a Rzeppa type CVJ is used on the rear axle side. Both the right and left have the same length to ensure straightline stability.

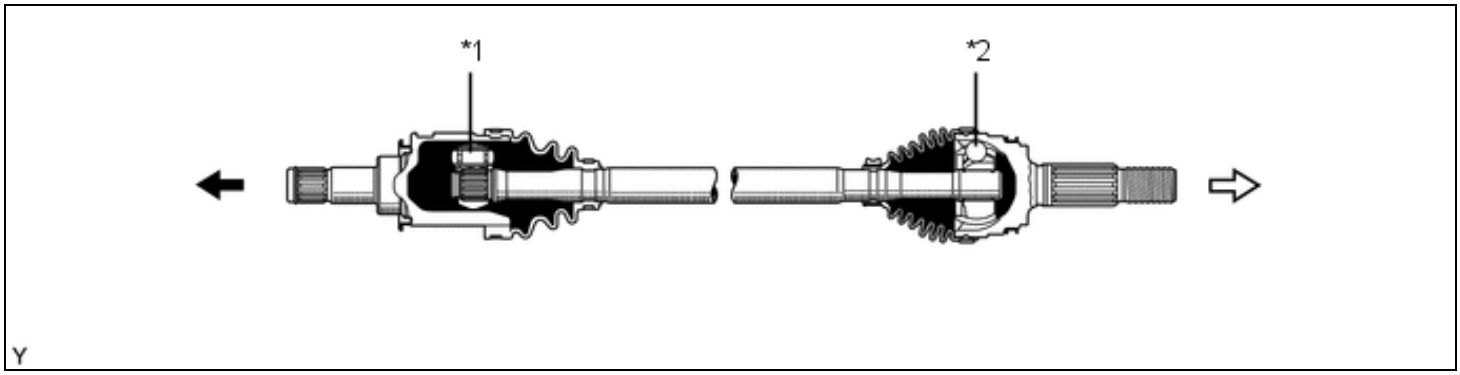


| | | | |
|---|---|---|---|
| *1 | Tripod Type CVJ | *2 | Rzeppa Type CVJ |
| ➡ | Rear Differential Side | ⇨ | Rear Axle Side |

| | | | |
|---|---|---|---|
| | | | |

TOYOTA