| | | |
|---|---|---|
| **Last Modified:** 03-12-2013 | 6.4 F | **Doc ID:** NM1000000004HCS |
| **Model Year:** 2013 | **Model:** RAV4 | **Prod Date Range:** [12/2012 - ] |
| **Title:** 2AR-FE ENGINE MECHANICAL: ENGINE UNIT: PISTON; 2013 MY RAV4 [12/2012 - ] | | |

# PISTON

## 1. CONSTRUCTION

(a) The piston is made of aluminum alloy and the skirt area is made compact and lightweight.

(b) The piston head portion uses a taper squish shape to improve the fuel combustion efficiency.

(c) The piston skirt has been coated with resin to reduce the friction loss.

(d) The groove of the top ring is coated with anodic oxide to improve wear resistance and corrosion resistance.

(e) Low-tension piston rings are used to reduce friction and achieve excellent fuel economy.

(f) Narrow-width piston rings are used to reduce weight and friction.

(g) A No. 1 compression ring with an inside bevel shape is used.

(h) A Physical Vapor Deposition (PVD) coating has been applied to the surface of the No. 1 compression ring in order to improve its wear resistance.

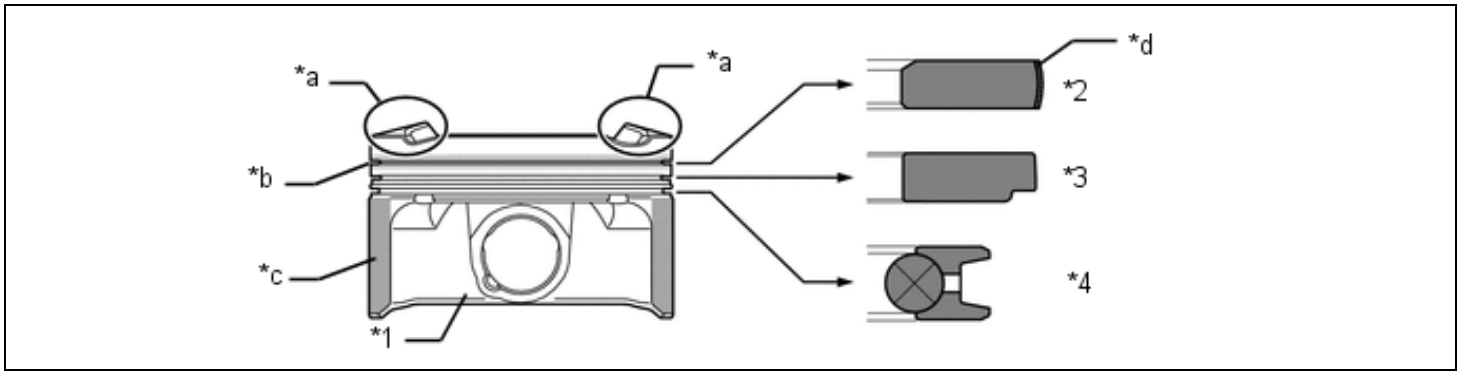


| | | | |
|---|---|---|---|
| *1 | Piston | *2 | No. 1 Compression Ring |
| *3 | No. 2 Compression Ring | *4 | Oil Ring |
| *a | Taper Squish Shape | *b | Anodic Oxide Coating |
| *c | Resin Coating | *d | PVD Coating |