| | | |
|---|---|---|
| **Last Modified:** 03-12-2013 | 6.4 F | **Doc ID:** NM1000000005IIR |
| **Model Year:** 2013 | **Model:** RAV4 | **Prod Date Range:** [12/2012 - ] |
| **Title:** METER / GAUGE / DISPLAY: METER / GAUGE SYSTEM: SYSTEM DIAGRAM; 2013 MY RAV4 [12/2012 - ] | | |

# SYSTEM DIAGRAM

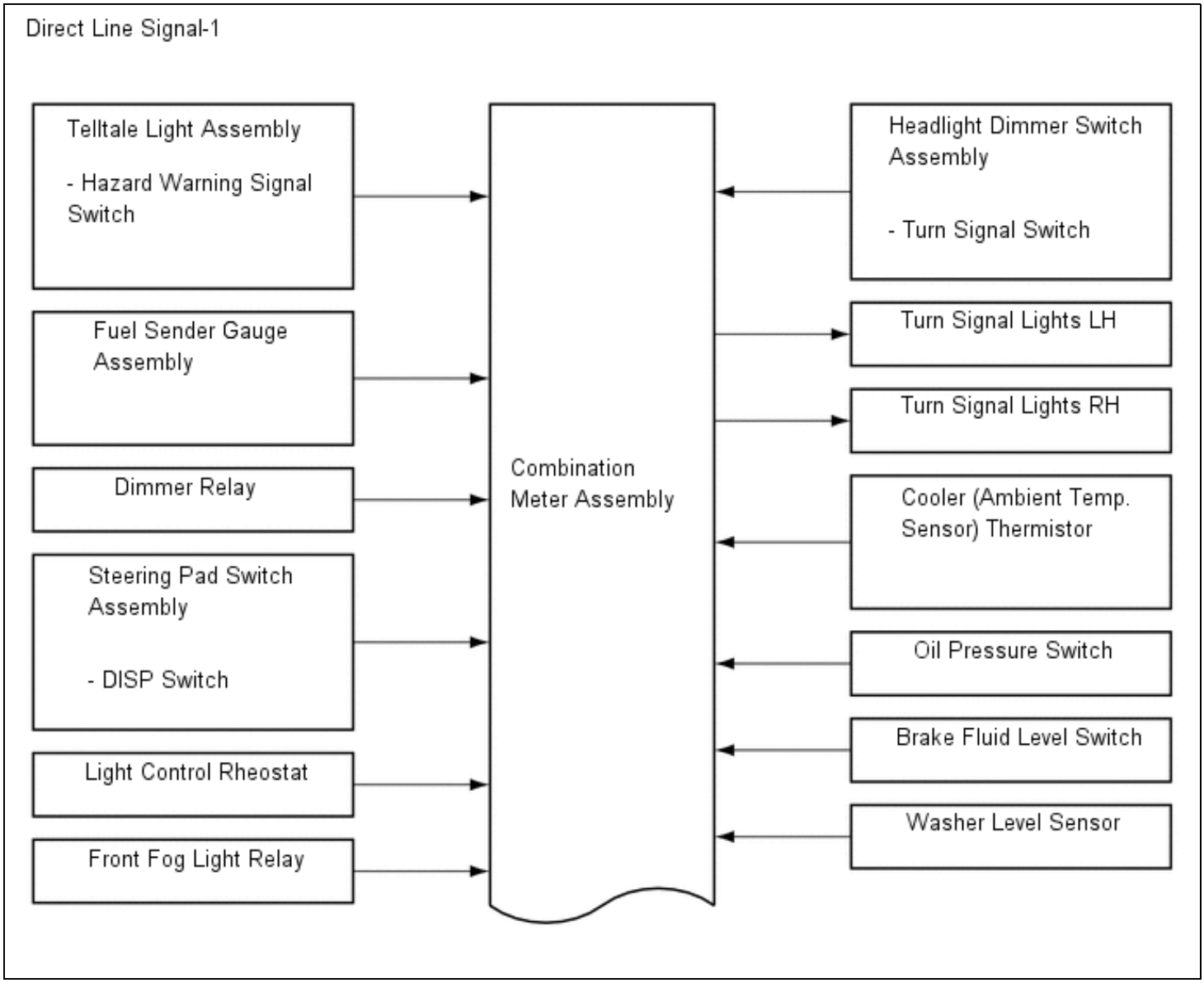

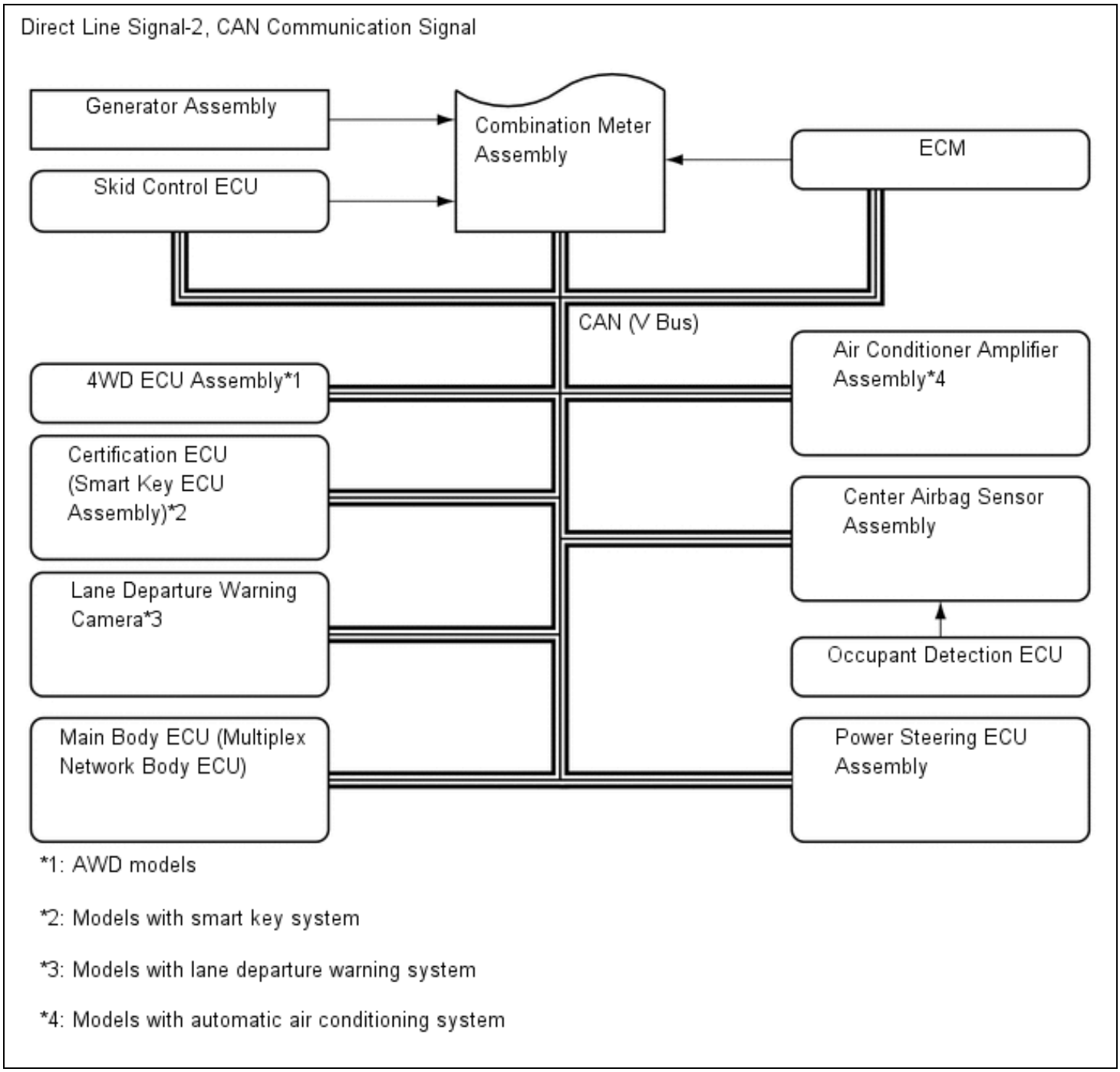


| ECU | INPUT SIGNAL |
|---|---|
| ECM | • Engine speed signal<br>• Shift position signal<br>• Current range position signal<br>• Drive mode signal<br>• Fuel injection volume signal<br>• Engine coolant temperature signal<br>• Buzzer sounding request signal<br>• Warning light control signal<br>• Indicator light illumination request signal<br>• Diagnosis |

| | |
|---|---|
| Center Airbag Sensor Assembly | • Warning light illumination request signal<br>• Front Passenger Seat Occupant Detection Signal<br>• Diagnosis |
| Main Body ECU (Multiplex Network Body ECU) | • Lighting status signal<br>• Door courtesy light switch signal<br>• Warning light illumination request signal<br>• Buzzer sounding request signal<br>• Driver seat belt buckle switch signal |
| Skid Control ECU | • Warning light illumination request signal<br>• Indicator light illumination request signal<br>• Vehicle speed signal<br>• Diagnosis |
| Certification ECU (Smart Key ECU Assembly) | • Buzzer sounding request signal<br>• Immobiliser certification signal<br>• Emergency request signal |
| 4WD ECU Assembly | • Warning light illumination request signal |
| Power Steering ECU Assembly | • Warning light illumination request signal<br>• Buzzer sounding request signal<br>• Diagnosis |
| Lane Departure Warning Camera | • Warning light illumination request signal<br>• Diagnosis |

**HINT:**

The input signals differ by vehicle specifications.