| | | |
|---|---|---|
| **Last Modified:** 03-12-2013 | 6.4 F | **Doc ID:** NM1000000005PV7 |
| **Model Year:** 2013 | **Model:** RAV4 | **Prod Date Range:** [12/2012 - ] |
| **Title:** STEERING COLUMN: STEERING COLUMN SYSTEM: MANUAL TILT AND TELESCOPIC MECHANISM; 2013 MY RAV4 [12/2012 - ] | | |

# MANUAL TILT AND TELESCOPIC MECHANISM

## 1. CONSTRUCTION

(a) The manual tilt and telescopic mechanism allows adjustment of the steering wheel position in the vertical and longitudinal (extending and retracting) directions through lever operation. This provides the driver with the most comfortable driving position.

(b) The tilt and telescopic mechanism mainly consists of a tilt and telescopic lever, column bracket, breakaway bracket and tilt and telescopic steering stoppers. For the tilt and telescopic mechanism, the steering column main shaft is connected at the serration engagement.

(c) The tilt adjustment range is 4° and the telescopic adjustment range is 40 mm (1.57 in.).

(d) When the tilt and telescopic mechanism is in its locked state, the tilt and telescopic lever at the lock position causes the cam of the tilt and telescopic steering stopper to tighten the column bracket. This secures the breakaway bracket, column bracket and column tube, so movement in the tilt direction and in the telescopic direction is locked.

(e) When the tilt and telescopic mechanism is in its free state, the tilt and telescopic lever at the free position causes the cam of the tilt and telescopic steering stoppers to loosen the column bracket. This frees the column tube to move in the tilt direction and in the telescopic direction, enabling adjustment.

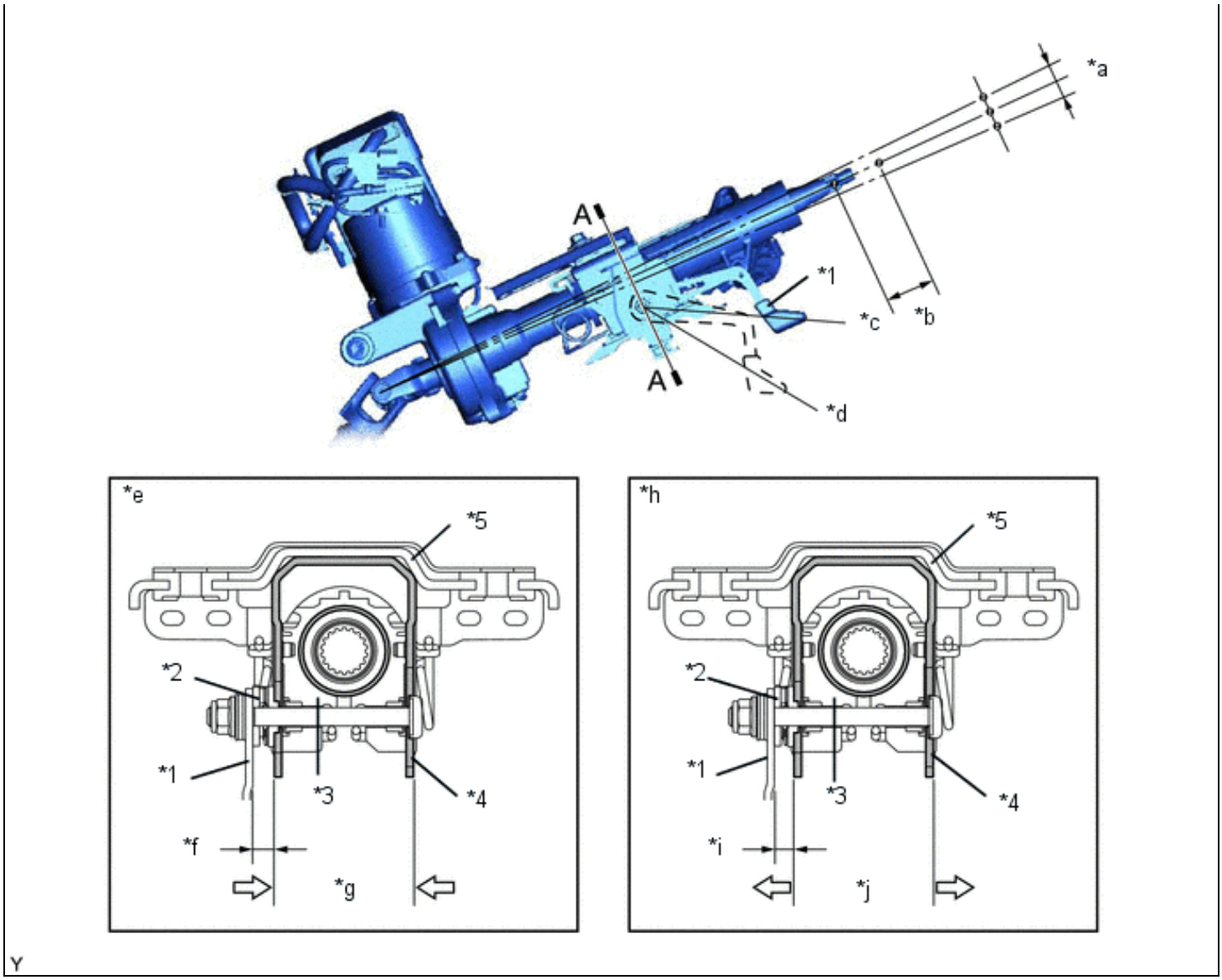


| | | | |
|---|---|---|---|
| *1 | Tilt and Telescopic Lever | *2 | Tilt and Telescopic Steering Stopper (Cam) |
| *3 | Column Tube | *4 | Column Bracket |
| *5 | Breakaway Bracket | - | - |
| *a | Tilt Stroke Stroke 4° | *b | Telescopic Stroke 40 mm (1.57 in.) |
| *c | Lock Position | *d | Free Position |
| *e | A - A Cross Section (Locked State) | *f | Wide |
| *g | Tighten | *h | A - A Cross Section (Free State) |
| *i | Narrow | *j | Loosen |