| | | |
|---|---|---|
| **Last Modified:** 03-12-2013 | 6.4 F | **Doc ID:** NM1000000004HBU |
| **Model Year:** 2013 | **Model:** RAV4 | **Prod Date Range:** [12/2012 - ] |
| **Title:** 2AR-FE ENGINE CONTROL: SFI SYSTEM: ACOUSTIC CONTROL INDUCTION SYSTEM (ACIS) CONTROL; 2013 MY RAV4 [12/2012 - ] | | |

# ACOUSTIC CONTROL INDUCTION SYSTEM (ACIS) CONTROL

## 1. FUNCTION

(a) The ACIS uses a bulkhead to divide the intake manifold into 2 stages, with an intake air control valve in the bulkhead being opened and closed to vary the effective length of the intake manifold in accordance with the engine speed and throttle valve opening angle. This increases the power output in all ranges from low to high speed.

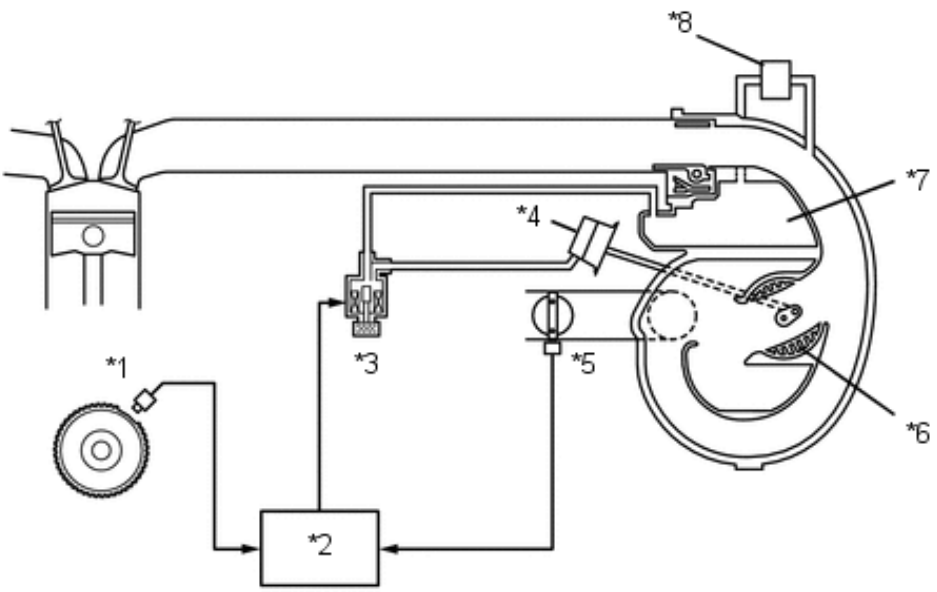


| | | | |
|---|---|---|---|
| *1 | Crank Position Sensor | *2 | ECM |
| *3 | VSV | *4 | Actuator |
| *5 | Throttle Position Sensor | *6 | Intake Air Control Valve |
| *7 | Vacuum Tank | *8 | Check Valve |