| | | |
|---|---|---|
| **Last Modified:** 03-12-2013 | 6.4 F | **Doc ID:** NM1000000004IEM |
| **Model Year:** 2013 | **Model:** RAV4 | **Prod Date Range:** [12/2012 - ] |
| **Title:** SUPPLEMENTAL RESTRAINT SYSTEMS: AIRBAG SYSTEM: PARTS LOCATION; 2013 MY RAV4 [12/2012 - ] | | |

# PARTS LOCATION

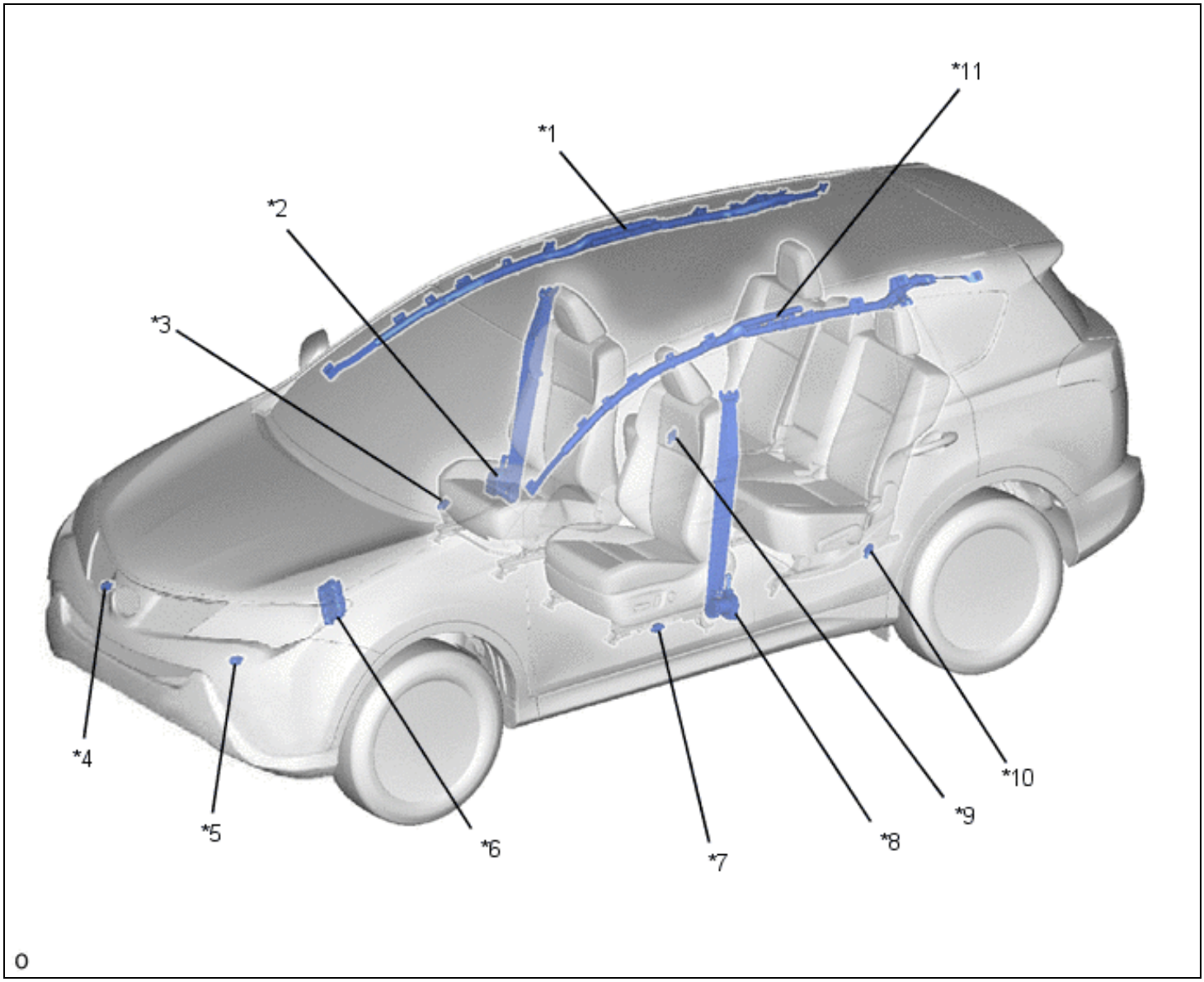


| | | | |
|---|---|---|---|
| *1 | Curtain Shield Airbag Assembly RH | *2 | Front Seat Outer Belt Assembly RH |
| *3 | Side Airbag Sensor Assembly RH | *4 | Front Airbag Sensor RH |
| *5 | Front Airbag Sensor LH | *6 | ECM |
| *7 | Side Airbag Sensor Assembly LH | *8 | Front Seat Outer Belt Assembly LH |
| *9 | No. 2 Side Airbag Sensor Assembly RH | *10 | No. 2 Side Airbag Sensor Assembly LH |
| *11 | Curtain Shield Airbag Assembly LH | - | - |

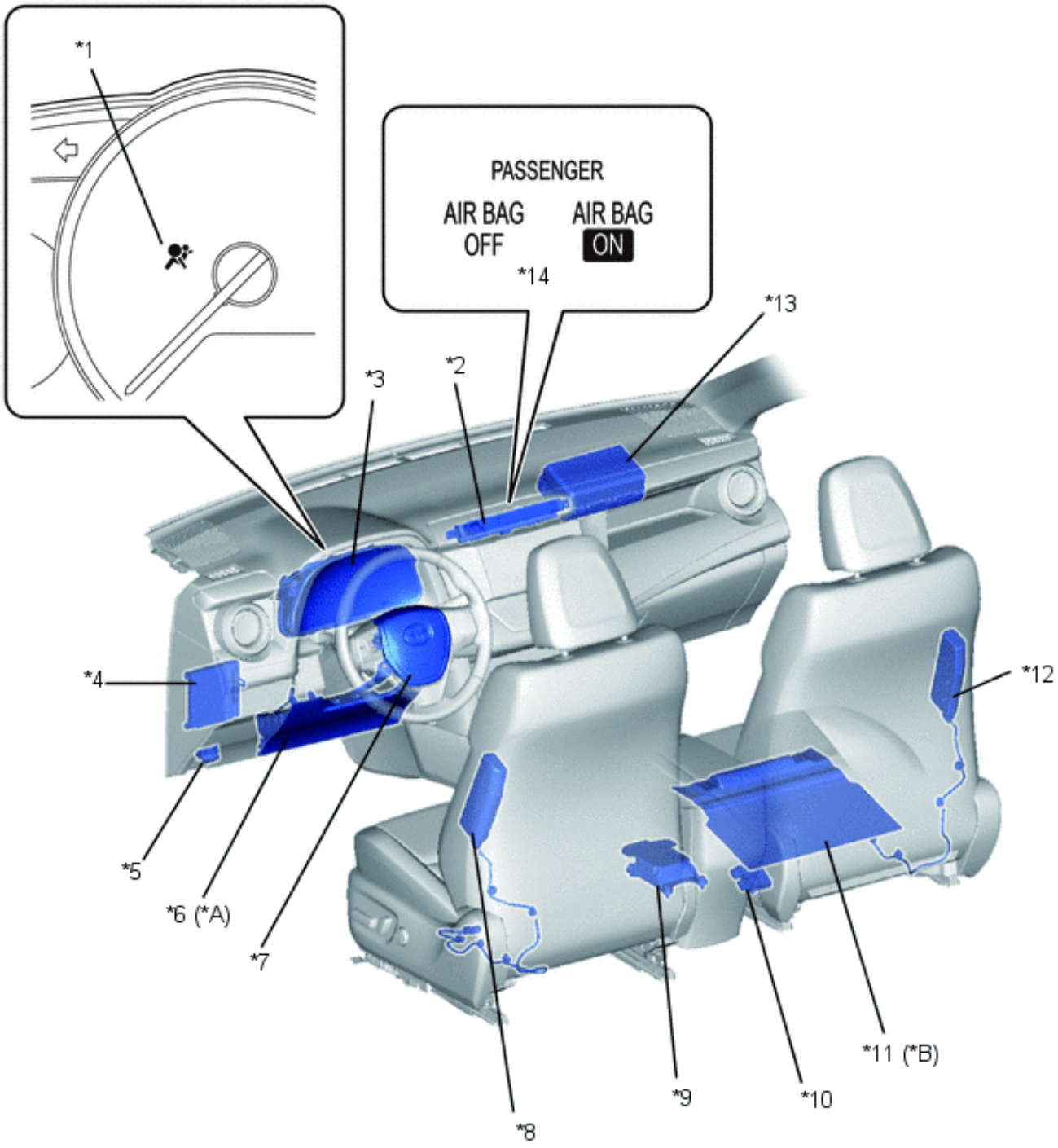


o

| | | | |
|---|---|---|---|
| *A | Models with SRS Driver Knee Airbag | *B | Models with SRS Seat Cushion Airbag |
| *1 | SRS Warning Light | *2 | Telltale Light Assembly |
| *3 | Combination Meter Assembly | *4 | Main Body ECU (Multiplex Network Body ECU) |

| | | | |
|---|---|---|---|
| | | | Body ECU) |
| *5 | DLC3 | *6 | Lower No. 1 Instrument Panel Airbag Assembly |
| *7 | Horn Button Assembly | *8 | Front Seat Airbag Assembly LH |
| *9 | Center Airbag Sensor Assembly (Airbag ECU Assembly) | *10 | Occupant Detection ECU |
| *11 | Front Seat Cushion Airbag Assembly RH | *12 | Front Seat Airbag Assembly RH |
| *13 | Instrument Panel Passenger without Door Airbag Assembly | *14 | AIRBAG ON/OFF Indicator Lights |