| | | |
|---|---|---|
| **Last Modified:** 03-12-2013 | 6.4 F | **Doc ID:** NM1000000005PTU |
| **Model Year:** 2013 | **Model:** RAV4 | **Prod Date Range:** [12/2012 - ] |
| **Title:** AXLE AND DIFFERENTIAL: DIFFERENTIAL SYSTEM: REAR DIFFERENTIAL; 2013 MY RAV4 [12/2012 - ] | | |

# REAR DIFFERENTIAL

## 1. CONSTRUCTION

(a) The electromagnetic control coupling is placed in front of the differential.

(b) A differential carrier and a differential retainer made of aluminum are used for weight reduction.

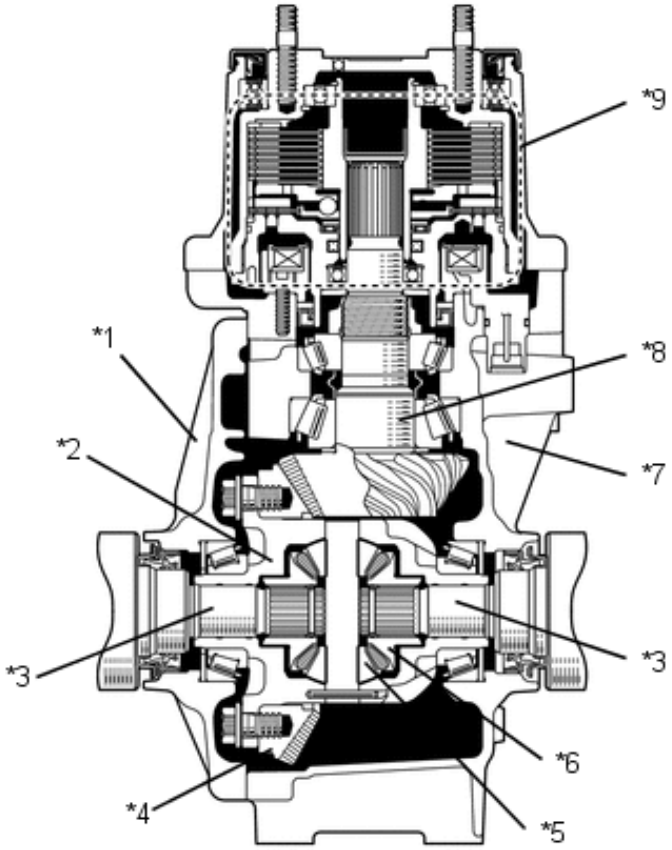


Y

| | | | |
|---|---|---|---|
| *1 | Rear Differential Retainer | *2 | Rear Differential Case |
| *3 | Rear Drive Shaft | *4 | Ring Gear |
| *5 | Pinion Gear | *6 | Side Gear |
| *7 | Rear Differential Carrier | *8 | Rear Drive Pinion |
| *9 | Electromagnetic Control Coupling Portion | - | - |

## 2. OPERATION

(a) Rear Differential Power Flow

(1) The illustration below shows the flow of power transmitted from the propeller shaft assembly:

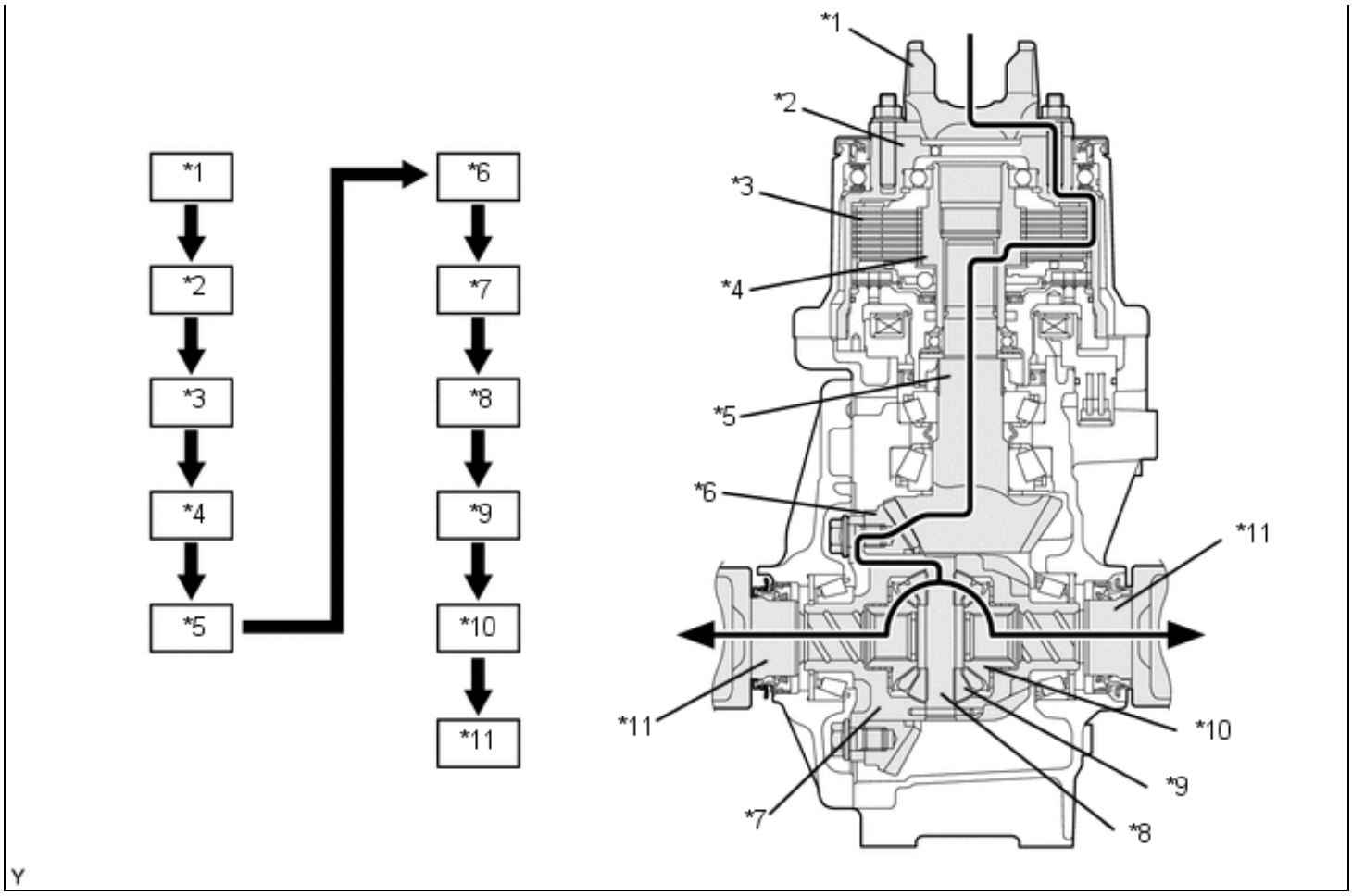


| | | | |
|---|---|---|---|
| *1 | Propeller Shaft | *2 | Front Housing |
| *3 | Main Clutch | *4 | Shaft |
| *5 | Drive Pinion | *6 | Ring Gear |
| *7 | Differential Case | *8 | Pinion Shaft |
| *9 | Pinion Gear | *10 | Side Gear |
| *11 | Rear Drive Shaft | - | - |
| ➡ | Power Flow | - | - |