| | | |
|---|---|---|
| **Last Modified:** 03-12-2013 | 6.4 F | **Doc ID:** NM1000000005Q7B |
| **Model Year:** 2013 | **Model:** RAV4 | **Prod Date Range:** [12/2012 - ] |
| **Title:** U760F AUTOMATIC TRANSMISSION / TRANSAXLE: SHIFT LOCK SYSTEM: PARTS LOCATION; 2013 MY RAV4 [12/2012 - ] | | |

# PARTS LOCATION

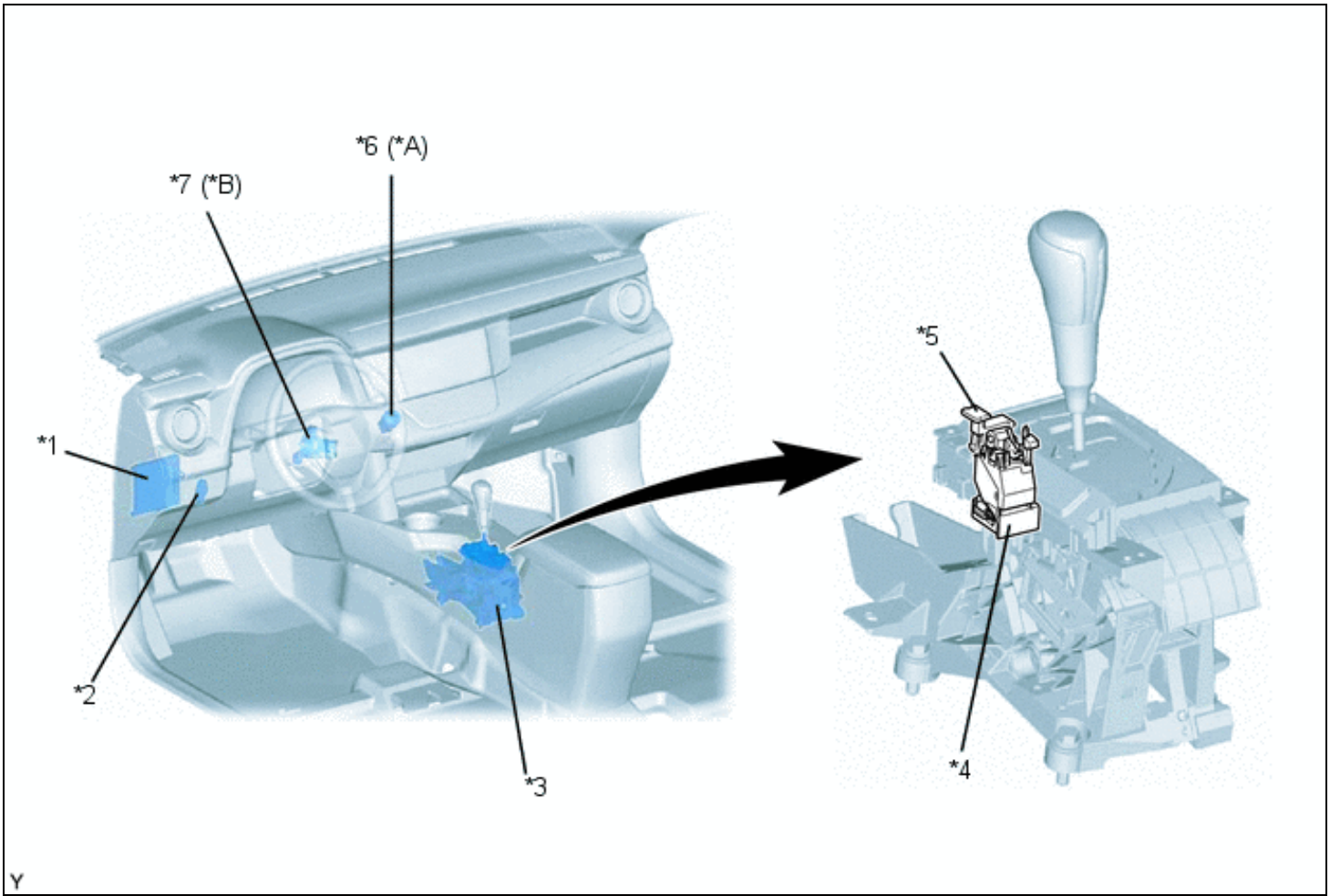


| | | | |
|---|---|---|---|
| *A | Models with Smart Key System | *B | Models without Smart Key System |
| *1 | Main Body ECU (Multiplex Network Body ECU) | *2 | Stop Light Switch Assembly |
| *3 | Floor Shift Lever Assembly | *4 | Shift Lock Solenoid<br>• P Detection Switch<br>• Shift Lock Control ECU |
| *5 | Shift Lock Release Button | *6 | Engine Switch (Push Start Switch) |
| *7 | Ignition Switch<br>• Key Interlock Solenoid | - | - |