| | | |
|---|---|---|
| **Last Modified:** 03-12-2013 | 6.4 F | **Doc ID:** NM1000000005IIO |
| **Model Year:** 2013 | **Model:** RAV4 | **Prod Date Range:** [12/2012 - ] |
| **Title:** HEATING / AIR CONDITIONING: AIR CONDITIONING SYSTEM: PARTS LOCATION; 2013 MY RAV4 [12/2012 - ] | | |

# PARTS LOCATION

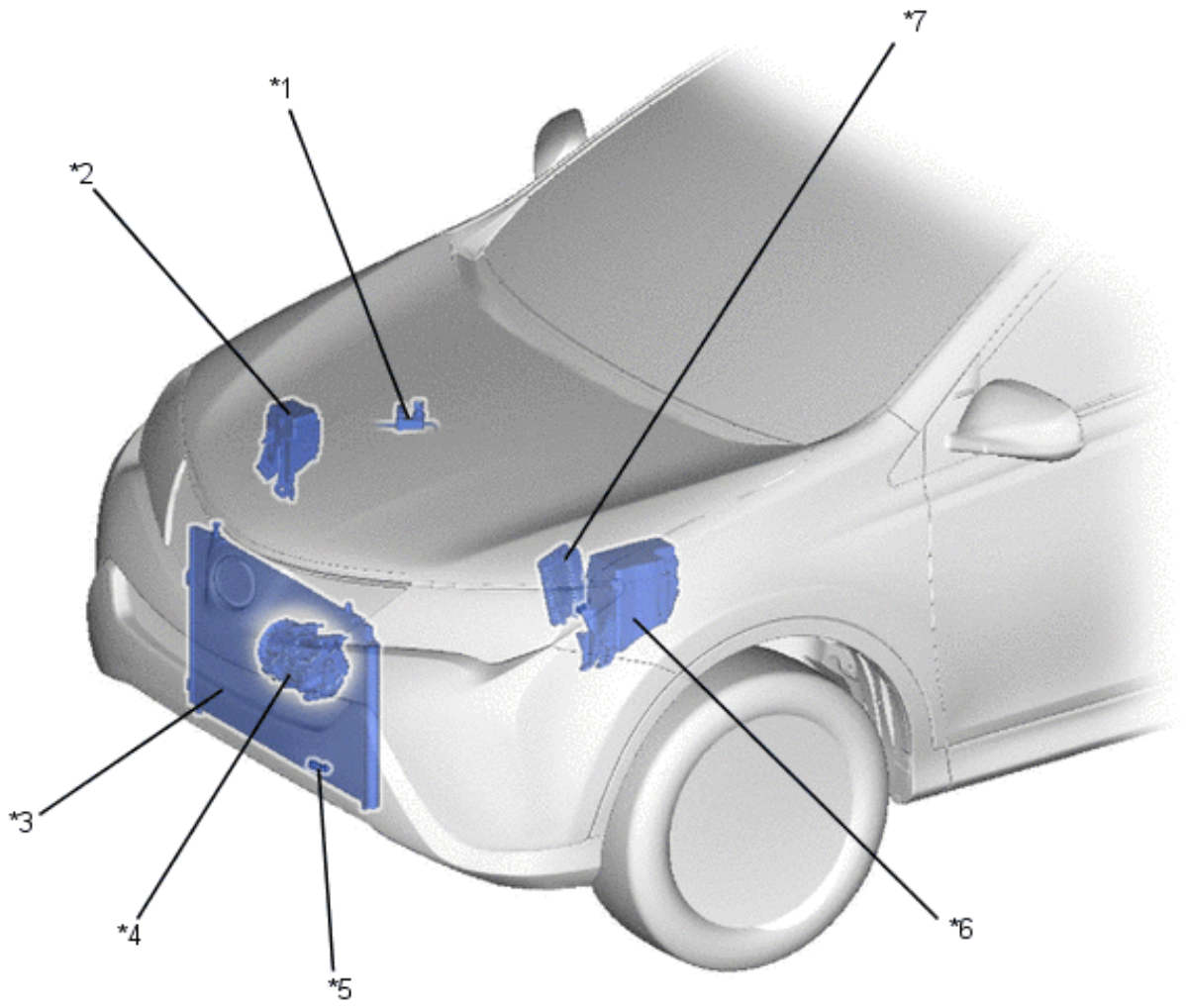


| | | | |
|---|---|---|---|
| *1 | Air Conditioning Pressure Sensor | *2 | Relay Block RH<br>• PTC Heater Relay |
| *3 | Cooler Condenser Assembly | *4 | Compressor with Pullery Assembly |
| | Cooler (Ambient Temp. Sensor) | | Relay Block LH |

| | | | |
|---|---|---|---|
| *5 | Cooler (Ambient Temp. Sensor) Thermistor | *6 | • Heater Relay |
| *7 | ECM | - | - |

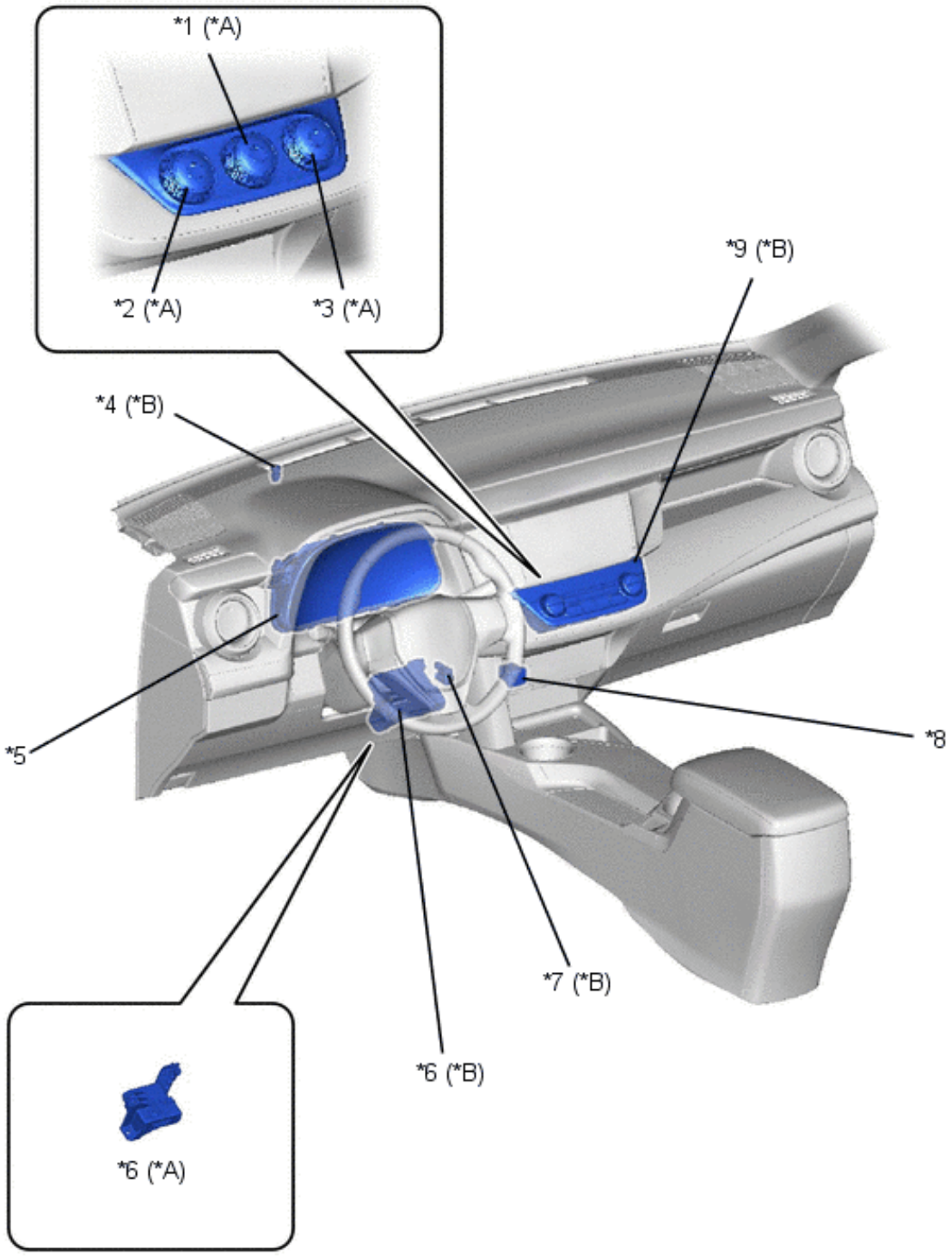


| | | | |
|---|---|---|---|
| *A | Models with Manual Air Conditioning System | *B | Models with Automatic Air Conditioning System |
| *1 | No. 2 Heater Control Sub-assembly | *2 | No. 1 Heater Control Sub-assembly |
| *3 | No. 3 Heater Control Sub-assembly | *4 | Solar Sensor (Automatic Light Control Sensor) |

| | | | |
|---|---|---|---|
| | | | Sensor) |
| *5 | Combination Meter Assembly | *6 | Air Conditioning Amplifier Assembly |
| *7 | Cooler (Room Temp. Sensor) Thermistor | *8 | Eco Mode Switch |
| *9 | Air Conditioning Control Assembly | - | - |

## Models with Automatic Air Conditioning System

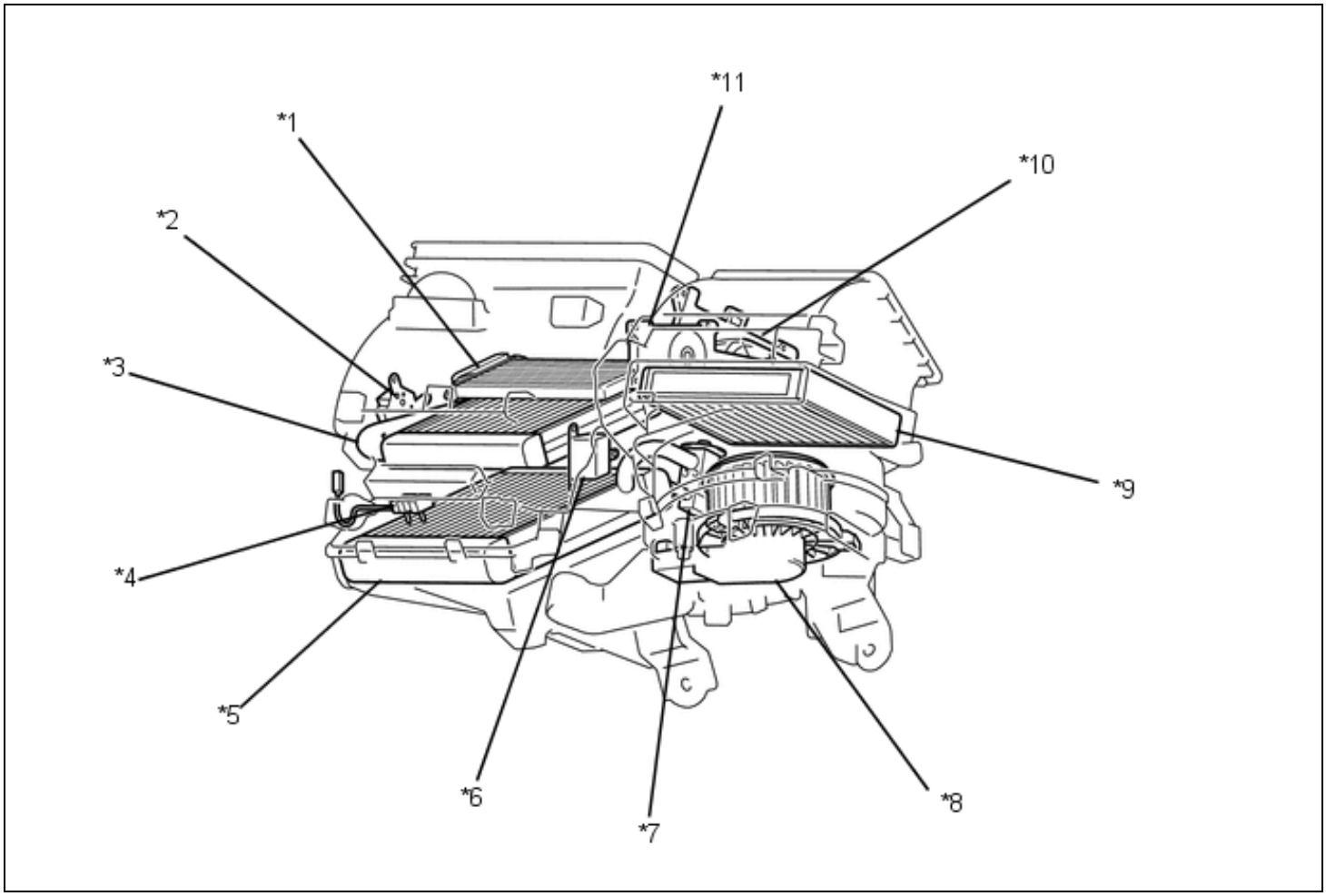


| | | | |
|---|---|---|---|
| *1 | PTC Heater (Quick Heater Assembly) | *2 | No. 1 Air Conditioning Radiator Damper Servo Sub-assembly |
| *3 | Heater Radiator Unit Sub-assembly | *4 | No. 1 Cooler Thermistor |
| *5 | No. 1 Cooler Evaporator Sub-assembly | *6 | No. 2 Air Conditioning Radiator Damper Servo Sub-assembly |
| *7 | Cooler Expansion Valve | *8 | Blower Motor with Fan Sub-assembly<br>• Blower Motor Controller |
| *9 | Clean Air Filter | *10 | No. 3 Air Conditioning Radiator Damper Servo Sub-assembly |
| *11 | No. 1 Damper Servo Sub-assembly | - | - |

## Models with Manual Air Conditioning System

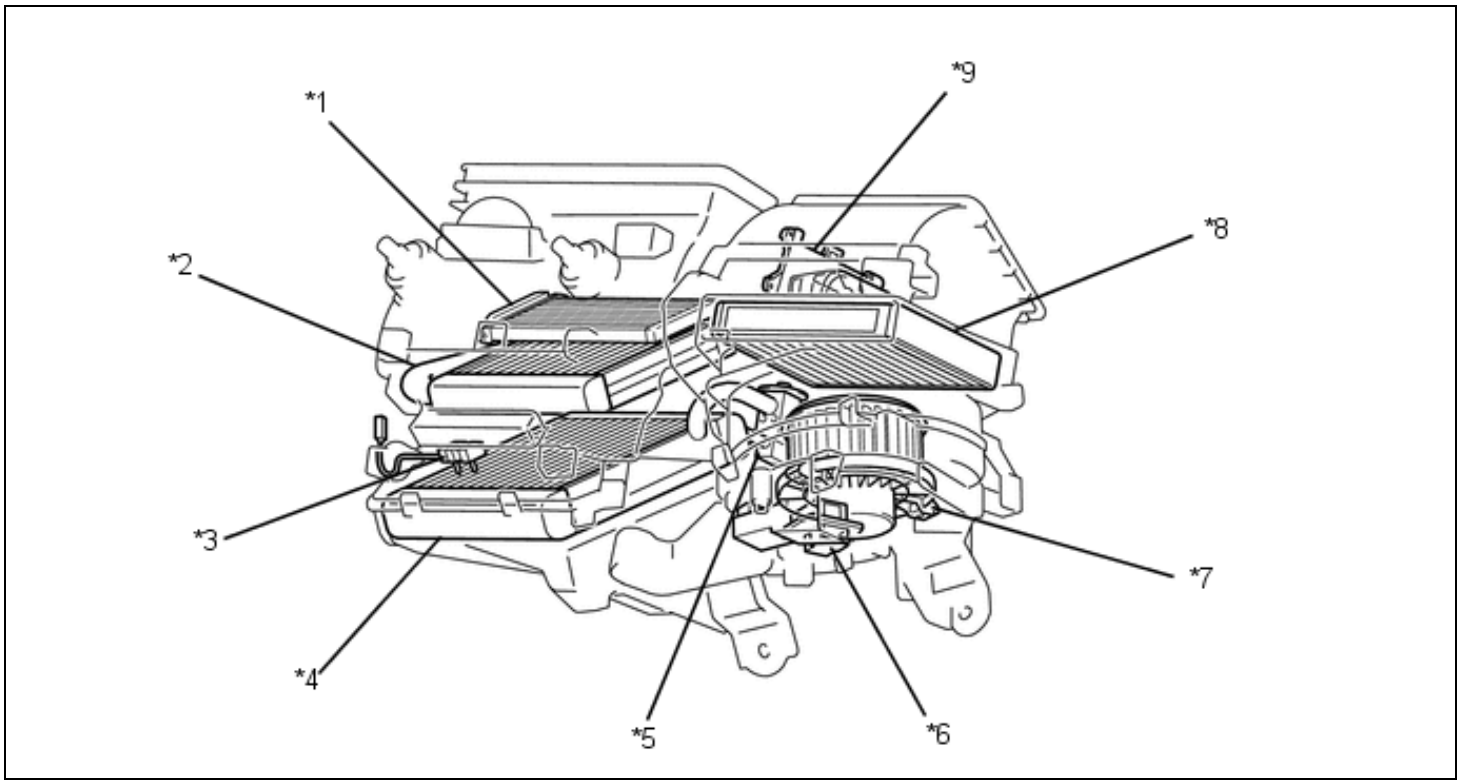


| | | | |
|---|---|---|---|
| *1 | PTC Heater (Quick Heater Assembly) | *2 | Heater Radiator Unit Sub-assembly |
| *3 | No. 1 Cooler Thermistor | *4 | No. 1 Cooler Evaporator Sub-assembly |
| *5 | Cooler Expansion Valve | *6 | Blower Register |
| *7 | Blower Motor with Fan Sub-assembly | *8 | Clean Air Filter |
| *9 | No. 1 Damper Servo Sub-assembly | - | - |