| | | |
|---|---|---|
| **Last Modified:** 03-12-2013 | 6.4 F | **Doc ID:** NM1000000005IIY |
| **Model Year:** 2013 | **Model:** RAV4 | **Prod Date Range:** [12/2012 - ] |
| **Title:** CRUISE CONTROL: CRUISE CONTROL SYSTEM: PARTS LOCATION; 2013 MY RAV4 [12/2012 - ] | | |

# PARTS LOCATION

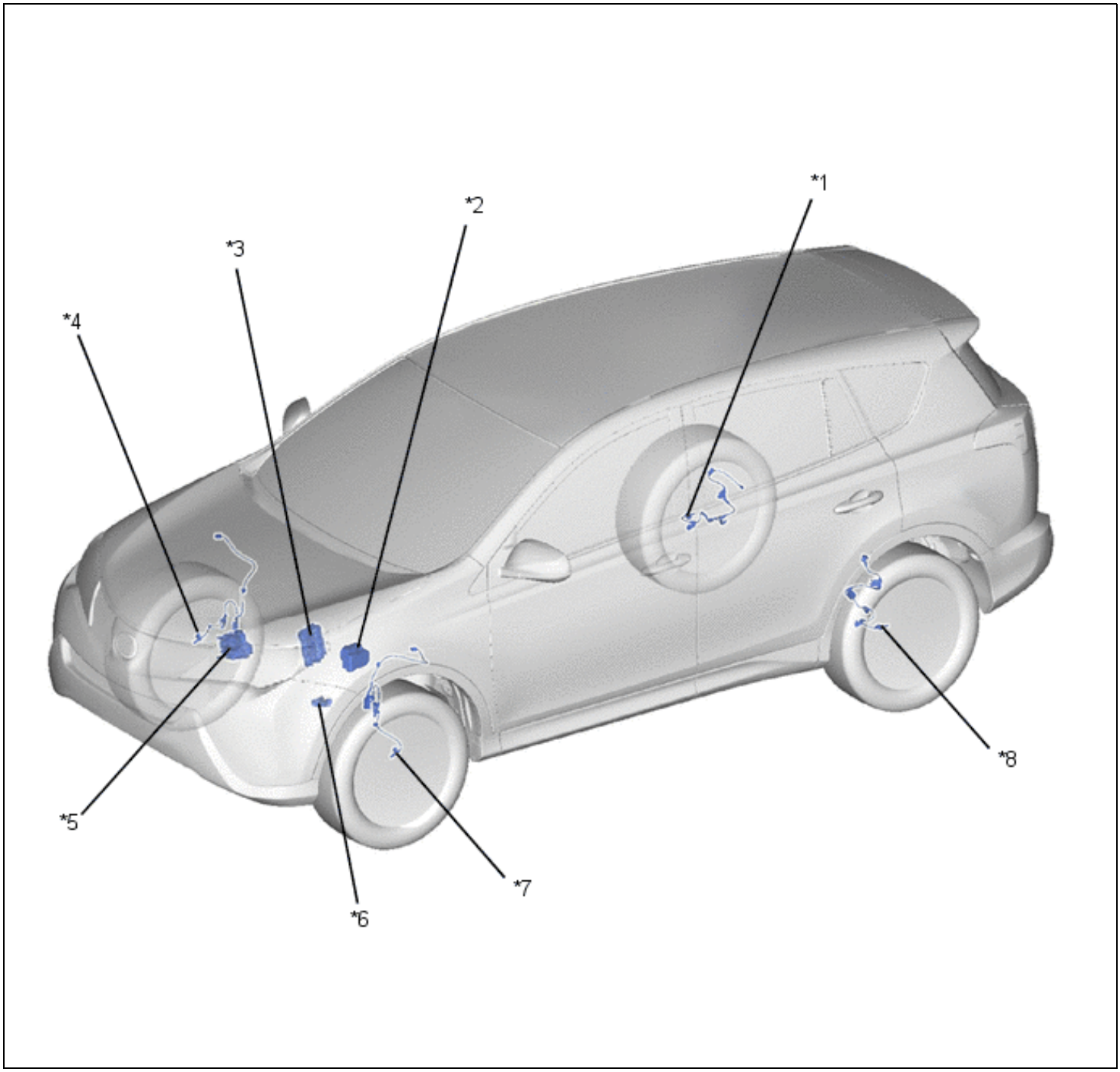


| | | | |
|---|---|---|---|
| *1 | Rear Speed Sensor RH | *2 | Brake Actuator Assembly<br>• Skid Control ECU |
| *3 | ECM | *4 | Front Speed Sensor RH |
| | Throttle Body Assembly | | |

| | | | |
|---|---|---|---|
| *5 | • Throttle Control Motor<br>• Throttle Position Sensor | *6 | Park/Neutral Position Switch Assembly |
| *7 | Front Speed Sensor LH | *8 | Rear Speed Sensor LH |

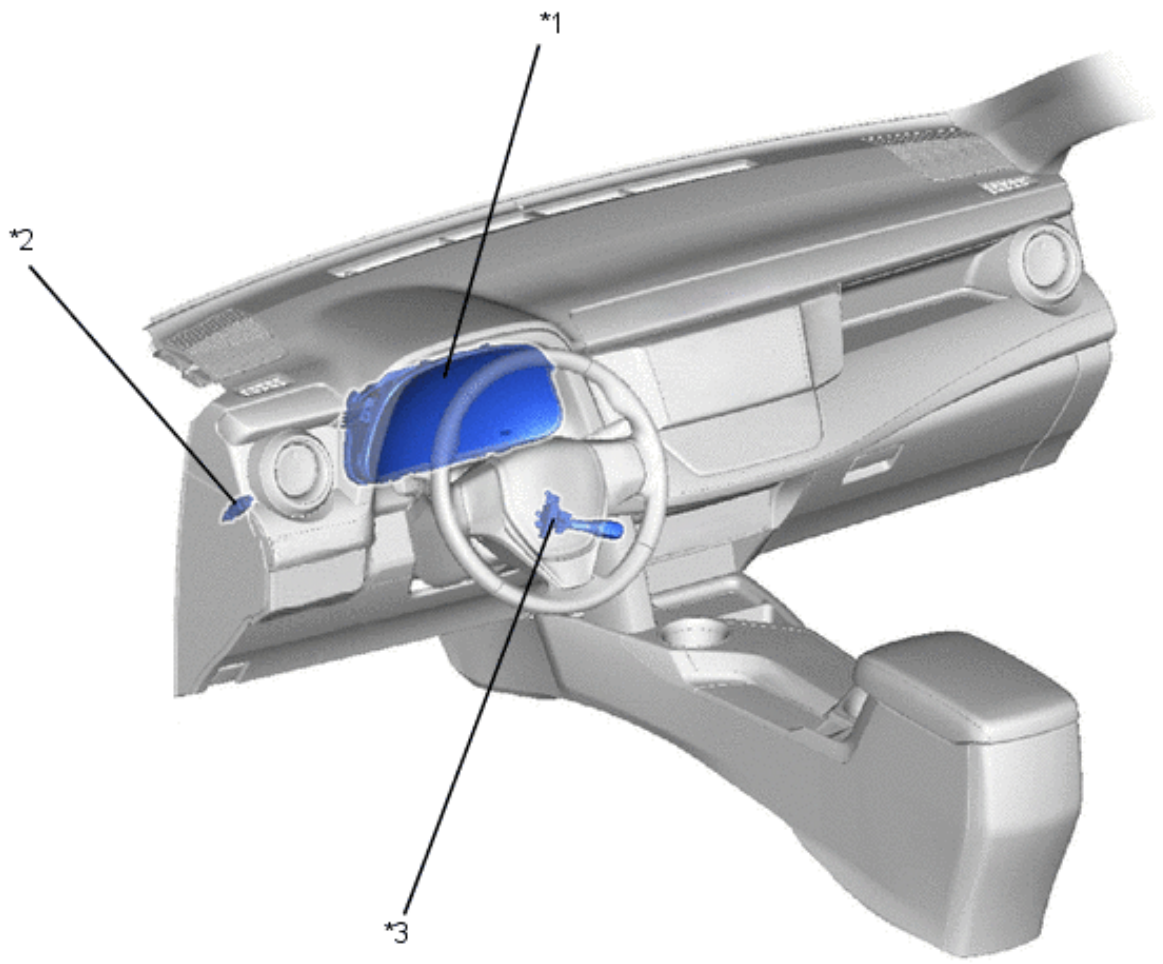


0

| | | | |
|---|---|---|---|
| *1 | Combination Meter Assembly | *2 | Stop Light Switch Assembly |
| *3 | Cruise Control Main Switch Assembly | - | - |