| | | |
|---|---|---|
| **Last Modified:** 03-12-2013 | 6.4 F | **Doc ID:** NM1000000004HC2 |
| **Model Year:** 2013 | **Model:** RAV4 | **Prod Date Range:** [12/2012 - ] |
| **Title:** 2AR-FE ENGINE CONTROL: SFI SYSTEM: COOLING FAN CONTROL; 2013 MY RAV4 [12/2012 - ] | | |

# COOLING FAN CONTROL

## 1. OPERATION

(a) The ECM activates the cooling fan relay to control the cooling fan in accordance with the engine coolant temperature, air conditioning condition, engine speed and vehicle speed.

(b) The cooling fan speeds are controlled in 2 stages: low speed (series connection) and high speed (parallel connection).

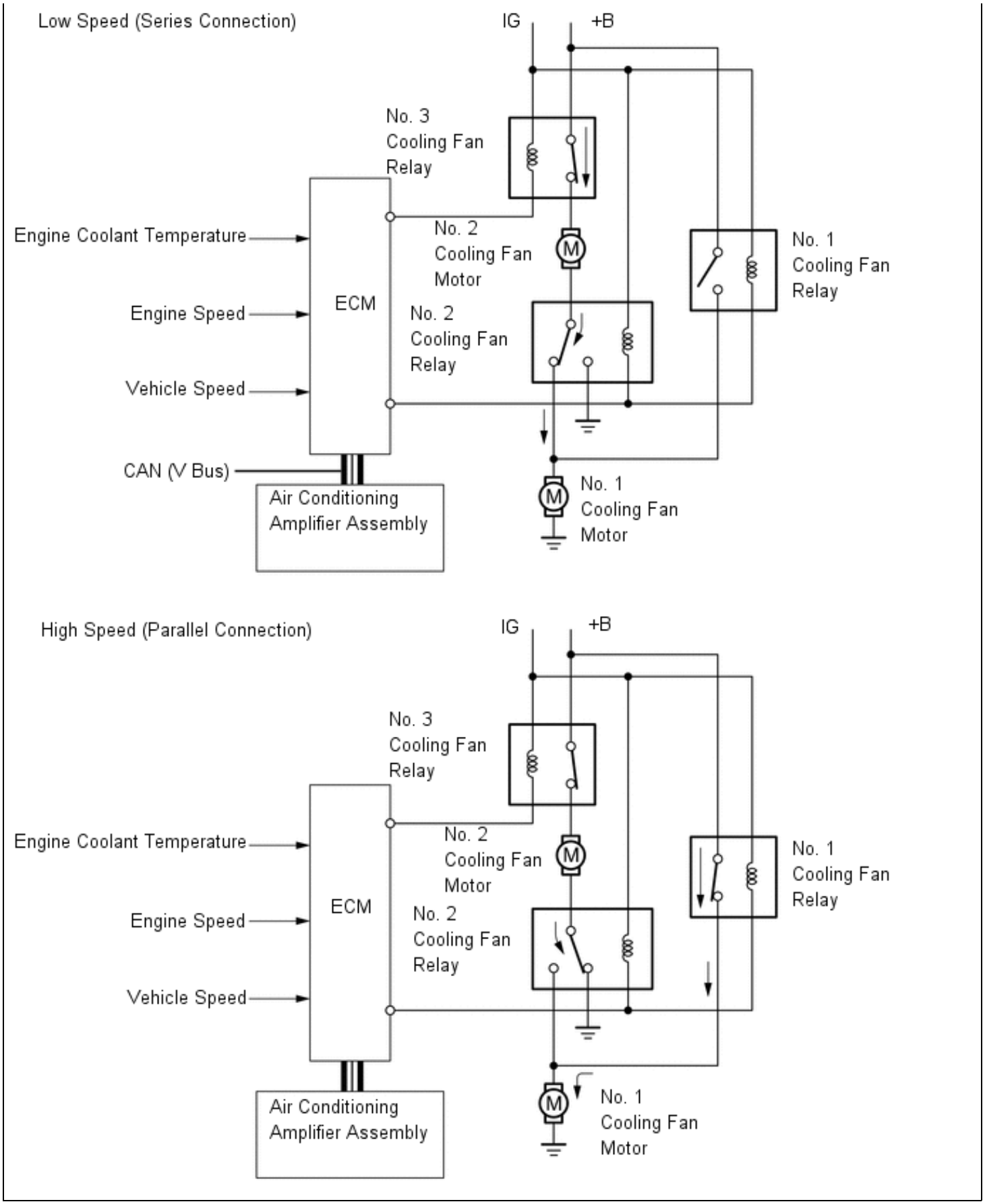
Low Speed (Series Connection)
IG
+B
No. 3
Cooling Fan
Relay
Engine Coolant Temperature
No. 2
Cooling Fan
Motor
No. 1
Cooling Fan
Relay
Engine Speed
ECM
No. 2
Cooling Fan
Relay
Vehicle Speed
CAN (V Bus)
Air Conditioning
Amplifier Assembly
No. 1
Cooling Fan
Motor
High Speed (Parallel Connection)
IG
+B
No. 3
Cooling Fan
Relay
Engine Coolant Temperature
No. 2
Cooling Fan
Motor
No. 1
Cooling Fan
Relay
Engine Speed
ECM
No. 2
Cooling Fan
Relay
Vehicle Speed
Air Conditioning
Amplifier Assembly
No. 1
Cooling Fan
Motor