| | | |
|---|---|---|
| **Last Modified:** 03-12-2013 | 6.4 F | **Doc ID:** NM1000000005II0 |
| **Model Year:** 2013 | **Model:** RAV4 | **Prod Date Range:** [12/2012 - ] |
| **Title:** LIGHTING (EXT): LIGHTING SYSTEM: GENERAL; 2013 MY RAV4 [12/2012 - ] | | |

# GENERAL

## 1. OUTLINE

(a) Exterior Light

(1) The front lights consist of the following lights:

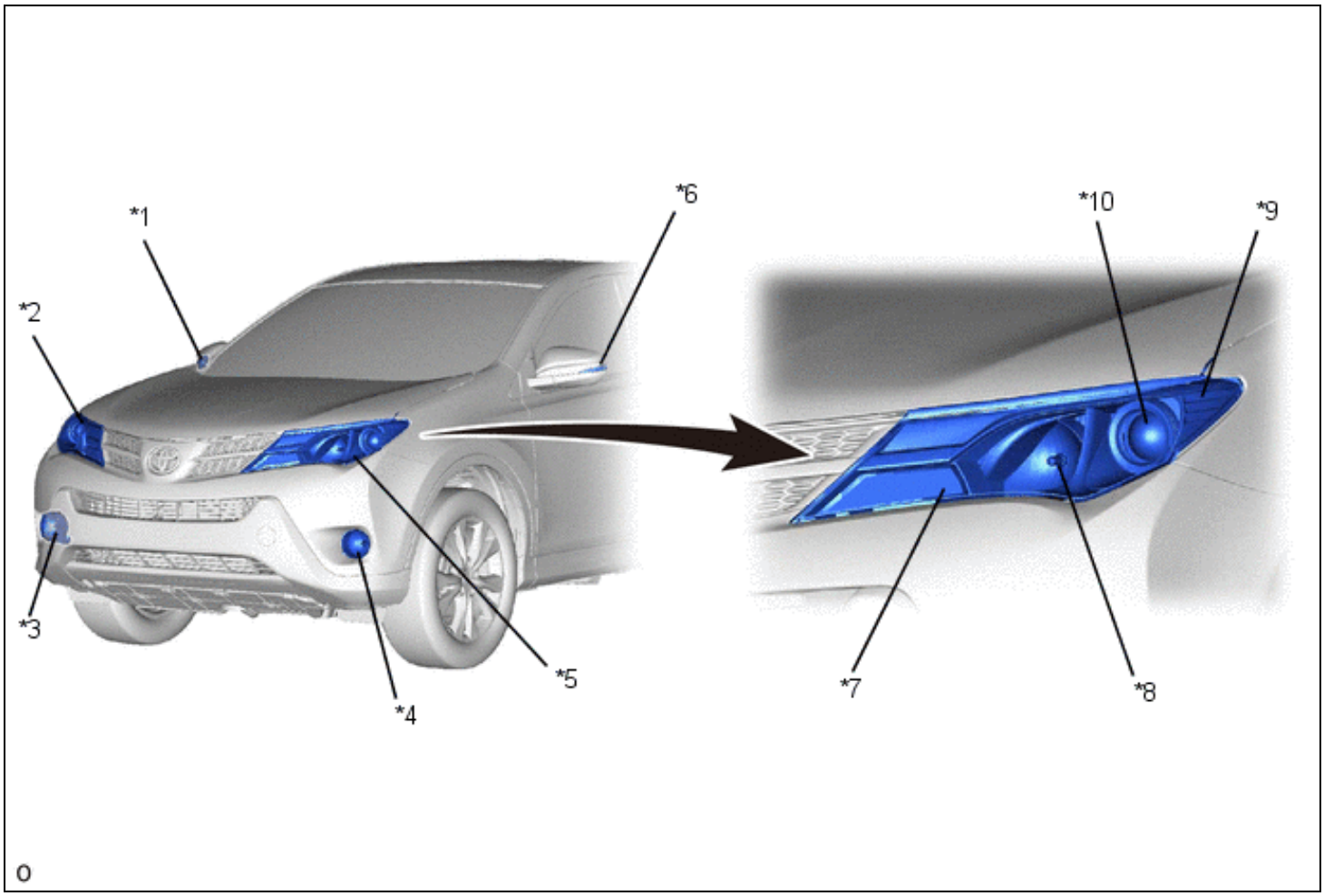


| | | | |
|---|---|---|---|
| *1 | Side Turn Signal Light Assembly RH | *2 | Headlight Assembly RH |
| *3 | Front Fog Light Assembly RH | *4 | Front Fog Light Assembly LH |
| *5 | Headlight Assembly LH | *6 | Side Turn Signal Light Assembly LH |
| *7 | Clearance Light/Front Turn Signal Light | *8 | High Beam Headlight/Daytime Running Light |
| *9 | Side Marker Light | *10 | Low Beam Headlight |

(2) The rear lights consist of the following lights:

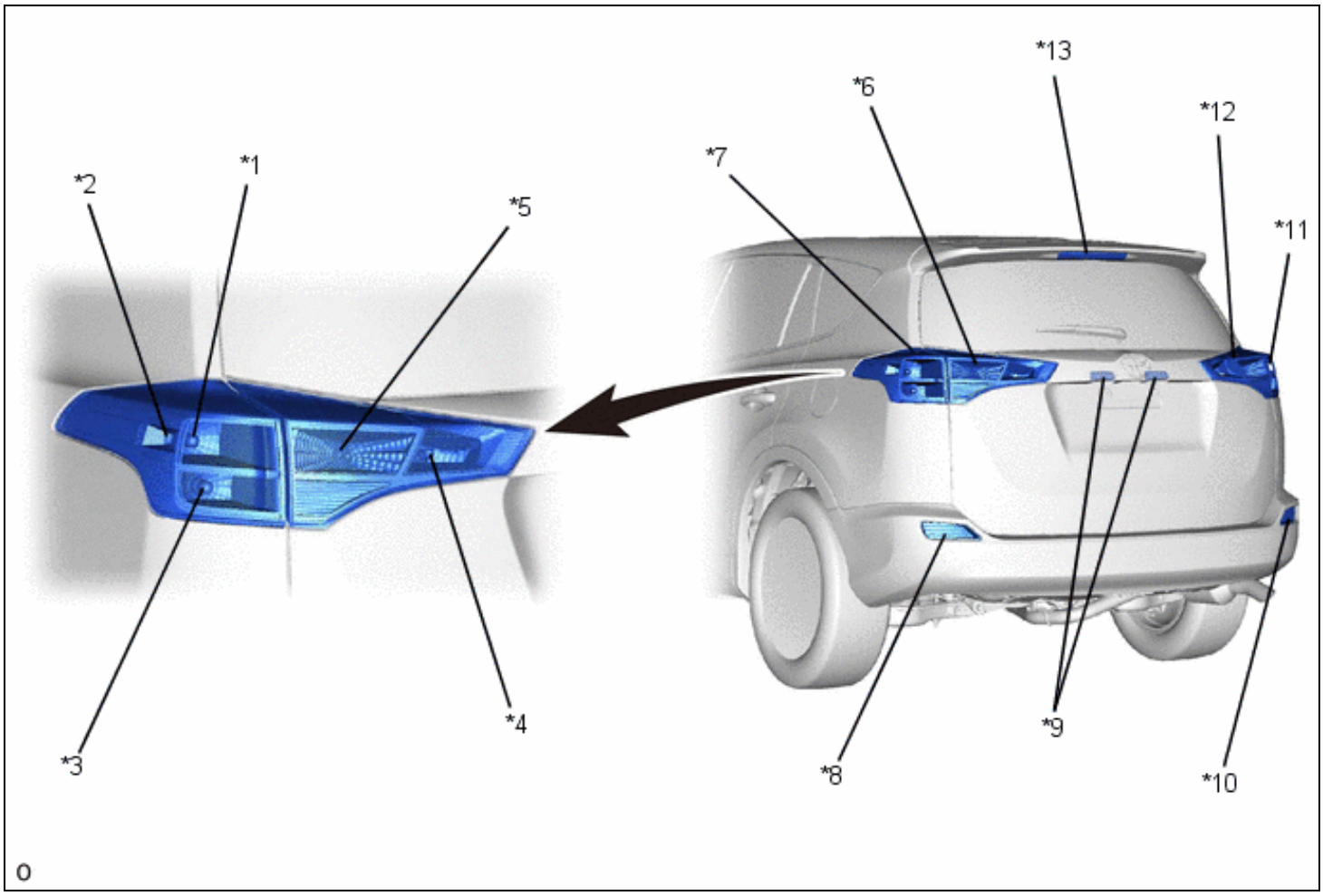


| | | | |
|---|---|---|---|
| *1 | Taillight/Stop Light | *2 | Side Marker Light |
| *3 | Rear Turn Signal Light | *4 | Back-up Light |
| *5 | Taillight | *6 | Rear Light Assembly LH |
| *7 | Rear Combination Light Assembly LH | *8 | Rear Reflex Reflector LH |
| *9 | License Plate Light Assembly | *10 | Rear Reflex Reflector RH |
| *11 | Rear Combination Light Assembly RH | *12 | Rear Light Assembly RH |
| *13 | Center Stop Light Assembly | - | - |

(b) Automatic Light Control System (Models with Automatic Light Control System)

(1) When the light control switch is in the AUTO position, the automatic light control sensor detects the ambient light level and automatically turns the headlights, taillights, clearance lights and license plate lights on or off accordingly.

(c) Light Automatic Turn-off System (Models with Light Auto Turn-off System)

(1) This system automatically turns off the headlights, taillights, and so on when the ignition switch is turned off.

(d) Daytime Running Light

(1) The daytime running light system is designed to automatically illuminate the daytime running light (high beam headlight) during the daytime to keep the vehicle highly visible to other vehicles.

(e) Automatic High Beam (AHB) System (Models with AHB System)

(1) The AHB system detects lights in front of the vehicle and automatically changes between high beams and

low beams to assist the driver during night driving.

## 2. SPECIFICATION

(a) Exterior Light

| LIGHT | | SPECIFICATION |
|---|---|---|
| Headlight Assembly | Low Beam Headlight | 12 V, 60 W (HB3L+ Type*1) |
| | High Beam Headlight/Daytime Running Light | 12 V, 60 W (HB3L+ Type*1) |
| | Clearance Light/Front Turn Signal Light | 12 V, 8/28 W (T20WB Type: Amber Bulb) |
| | Side Marker Light | 12 V, 5 W (W5W Type) |
| Front Fog Light Assembly | | 12 V, 19 W (H16 Type) |
| Side Turn Signal Light Assembly | | 12 V, 0.5 W (LED x 2) |
| Rear Combination Light Assembly | Taillight/Stop Light | 12 V, 5/21 W (W21W type) |
| | Side Marker Light | -*2 |
| | Rear Turn Signal Light | 12 V, 21W (WY21W Type: Amber Bulb) |
| Rear Light Assembly | Taillight | 12 V, 5 W (W5W Type) |
| | Back-up Light | 12 V, 16 W (W16W Type) |
| Center Stop Light Assembly | | 12 V, 0.6 W (LED x 9) |
| License Plate Light | | 12 V, 5 W (W5W Type) |

**HINT:**

*1: HB3 type is replaceable.

*2: The light source has been used with taillight/stop light.

## 3. PRECAUTION

(a) Automatic High Beam (AHB) System (Models with Automatic High Beam (AHB) System)

(1) The automatic high beam system is a system that helps ensure visibility by automatically turning the high beams on and off.

(2) However, due to control limitations of the automatic high beam system, it may be necessary to manually turn the high beams on and off. When driving, for safety reasons, make sure to change the high beams and low beams manually according to the driving conditions.

(3) Under the following conditions, the automatic high beam system might not detect other vehicles or lights correctly, or the high beams might cause glare or flash pedestrians or the occupants of other vehicles. Manual operation should be used.

| FACTOR | CONDITION |
|---|---|
| Weather/Climate | When driving in bad weather (rain, snow, fog, sandstorms, etc.). |
| | • When the windshield glass is not clear (ice, snow or frost on the |

| | |
|---|---|
| Windshield Glass | glass).<br>• When the windshield glass is dirty (sand, mud, water stains or bugs on the glass).<br>• When the windshield glass is cracked.<br>• When the windshield glass is fogged-up.<br>• When the windshield glass has a film attached.<br>• When an object on the instrument panel reflects off of the windshield glass.<br>• When any other abnormal conditions exist with the windshield glass. |
| Automatic High Beam (AHB) Sensor (Lane Departure Warning Camera) | • When a parking tag, magnifying lens or other accessory is mounted on the AHB sensor.<br>• When the AHB sensor or its built-in camera is deformed.<br>• When the automatic high beam sensor in the AHB sensor is dirty.<br>• When any other abnormal conditions exist with the AHB sensor or its built-in automatic high beam sensor. |
| Nearby Vehicles or Lights | • When lights similar to headlights or taillights are in the vicinity of the vehicle.<br>• When a nearby vehicle has no lights or its lights are off.<br>• When a vehicle in front has misaligned lights, or its lights are changing color.<br>• When a vehicle in front has extremely dirty headlights or taillights. |
| Road Conditions | • When driving in an area where the conditions often change between bright and dark.<br>• When driving on a road with many uphill and downhill slopes.<br>• When driving on a winding road or around a sharp curve.<br>• When driving on a bumpy road (cobblestone pavement, gravel road, rough unpaved road, etc.).<br>• When highly reflective objects are in front of the vehicle (mirrors, road signs, etc.). |
| Vehicle Conditions | • When the headlights are damaged, deformed or dirty.<br>• When the vehicle posture is abnormal due to flat tire (or posture has changed due to the vehicle being fully loaded, a trailer being towed, etc.).<br>• When the vehicle has other malfunctions or if the vehicle has been modified. |
| Automatic High Beam (AHB) System | Malfunction:<br>• When the automatic high beam indicator light on the combination meter assembly is blinking.<br>Others:<br>• When the Automatic High Beam (AHB) system does not seem to be changing between the high beams and low beams properly.<br>• When the Automatic High Beam (AHB) system is frequently |

| | |
|---|---|
| | changing between the high beams and low beams.<br>• When the glare from the high beams would disturb pedestrians or the drivers of other vehicles. |

(b) Ignition Switch Expressions

(1) The type of ignition switch used on this model differs depending on the specifications of the vehicle. The expressions listed in the table below are used in this section.

| EXPRESSION | IGNITION SWITCH (POSITION) | ENGINE SWITCH (CONDITION) |
|---|---|---|
| Ignition Switch off | LOCK | Off (Lock) |
| Ignition Switch ACC | ACC | On (ACC) |
| Ignition Switch ON | ON | On (IG) |
| Engine Start | START | On (Start) |