| | | |
|---|---|---|
| **Last Modified:** 03-12-2013 | 6.4 F | **Doc ID:** NM1000000004HCO |
| **Model Year:** 2013 | **Model:** RAV4 | **Prod Date Range:** [12/2012 - ] |
| **Title:** 2AR-FE ENGINE MECHANICAL: ENGINE UNIT: CYLINDER HEAD COVER; 2013 MY RAV4 [12/2012 - ] | | |

# CYLINDER HEAD COVER

## 1. CONSTRUCTION

(a) A lightweight magnesium alloy die-cast cylinder head cover sub-assembly is used.

(b) An oil delivery pipe is installed inside the cylinder head cover sub-assembly. This ensures lubrication to the sliding parts of the valve rocker arm sub-assembly, improving reliability.

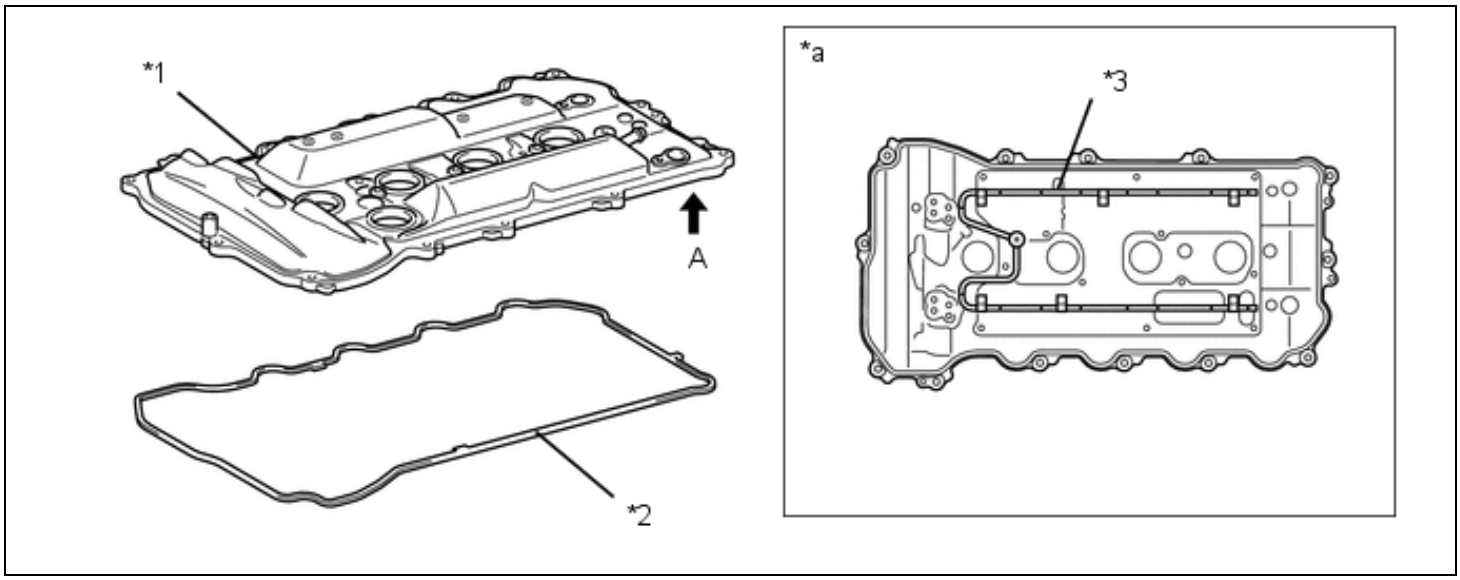


| | | | |
|---|---|---|---|
| *1 | Cylinder Head Cover Sub-assembly | *2 | Cylinder Head Cover Gasket |
| *3 | Oil Delivery Pipe | - | - |
| *a | View from A | - | - |