| | | |
|---|---|---|
| **Last Modified:** 03-12-2013 | 6.4 F | **Doc ID:** NM1000000005G0U |
| **Model Year:** 2013 | **Model:** RAV4 | **Prod Date Range:** [12/2012 - ] |
| **Title:** THEFT DETERRENT / KEYLESS ENTRY: SMART KEY SYSTEM: PARTS LOCATION; 2013 MY RAV4 [12/2012 - ] | | |

# PARTS LOCATION

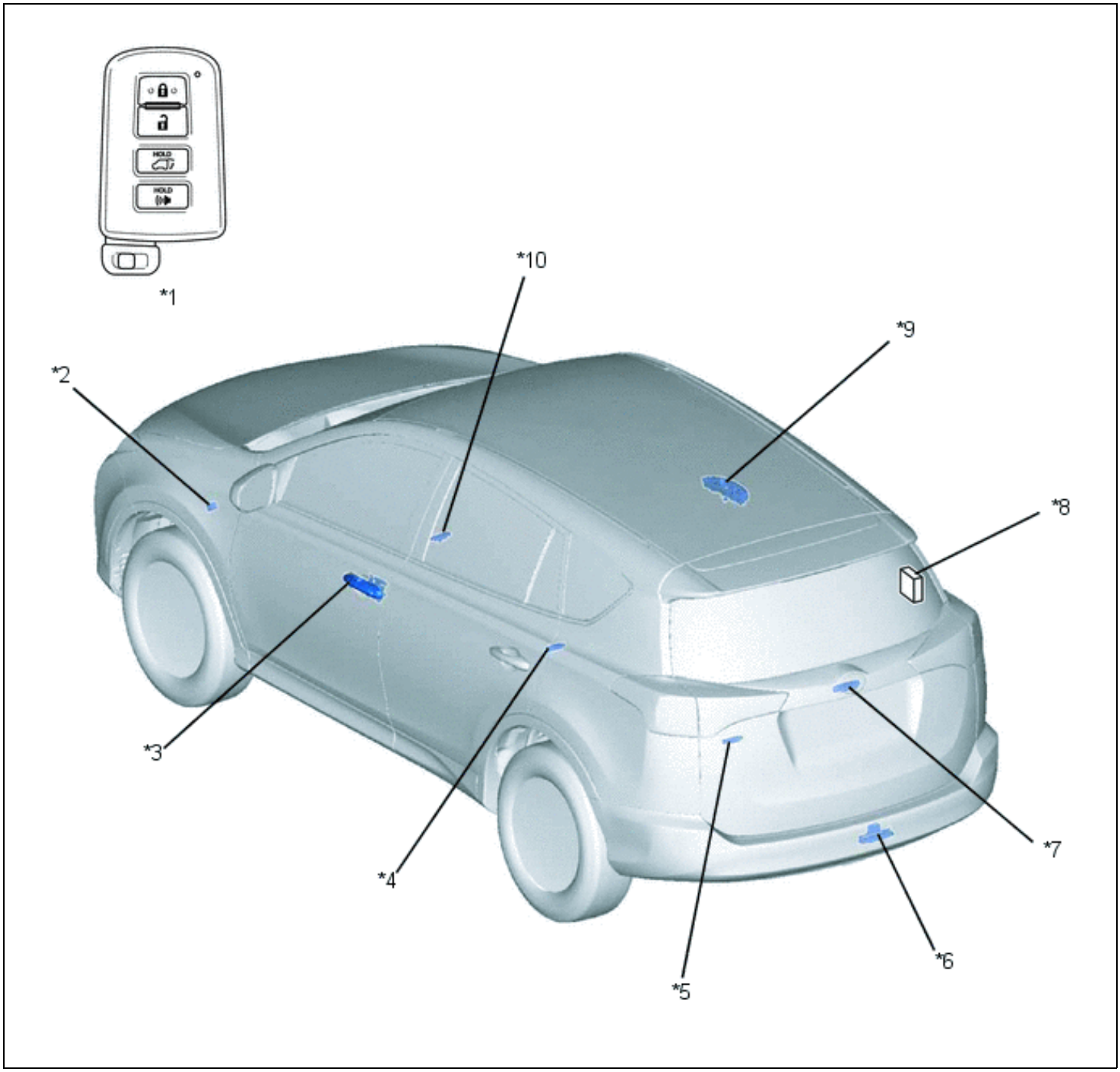


| | | | |
|---|---|---|---|
| *1 | Electrical Key Transmitter Sub-assembly | *2 | Wireless Door Lock Buzzer |
| *3 | Front Outside Door Handle Assembly LH | *4 | No. 2 Indoor Electrical Key Antenna Assembly |
| *5 | No. 3 Indoor Electrical Key Antenna | *6 | Outside Electrical Key Antenna |

| | | | |
|---|---|---|---|
| *5 | Assembly | *6 | Outside Electrical Key Antenna |
| *7 | Back Door Opener Switch Assembly<br>• Back Door Opener Switch<br>• Lock Switch | *8 | Door Control Receiver |
| *9 | Front Outside Door Handle Assembly RH | *10 | No. 1 Indoor Electrical Key Antenna Assembly |

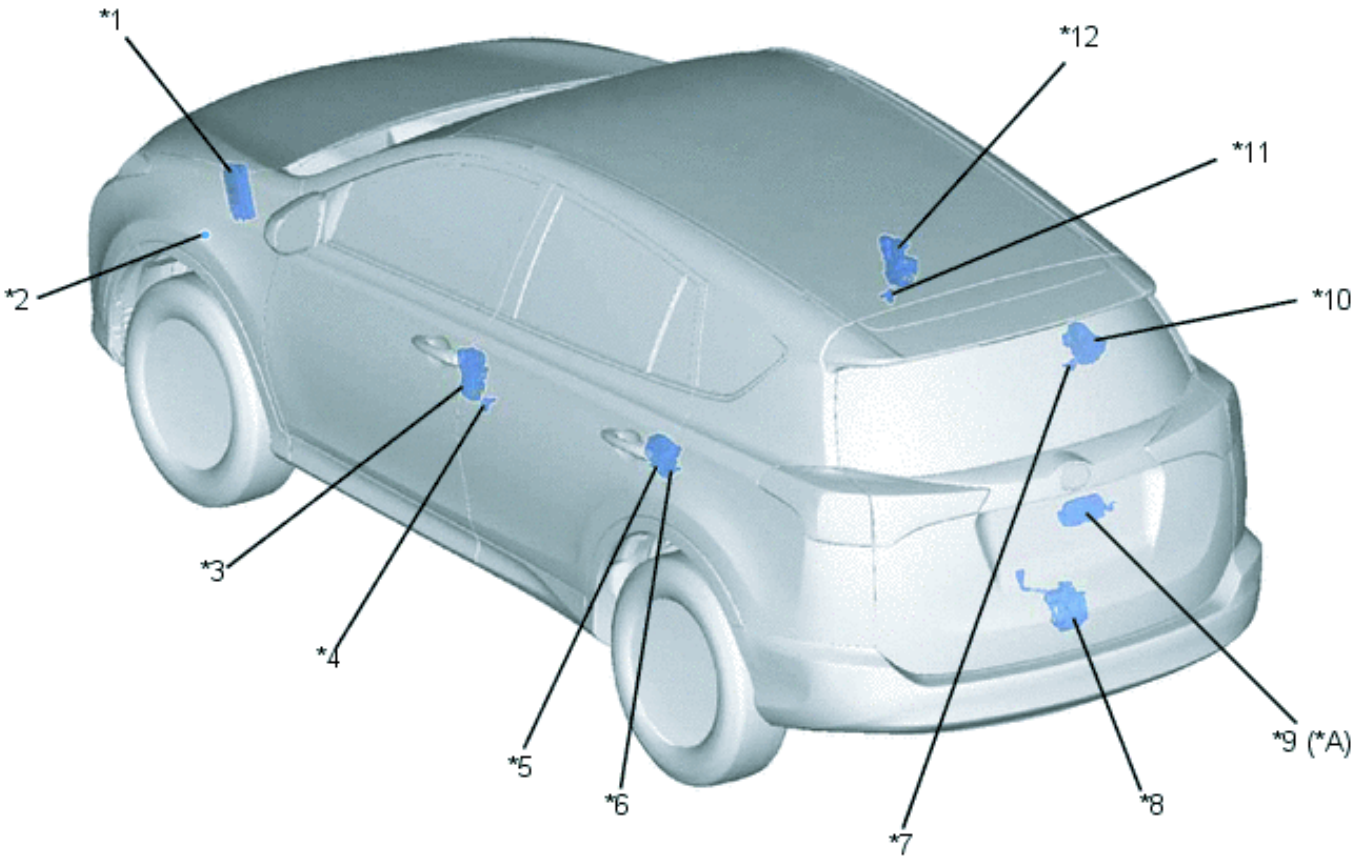

| | | | |
|---|---|---|---|
| *A | Models with Power Back Door System | - | - |
| *1 | ECM | *2 | Wireless Door Lock Buzzer |
| *3 | Front Door with Motor Lock Assembly LH | *4 | Front Door Courtesy Light Switch Assembly LH |
| *5 | Rear Door with Motor Lock Assembly LH | *6 | Rear Door Courtesy Light Switch Assembly LH |
| *7 | Rear Door Courtesy Light Switch Assembly RH | *8 | Back Door Lock Assembly |

| | | | |
|---|---|---|---|
| *9 | Power Back Door ECU (Multiplex Network Door ECU) | *10 | Rear Door with Motor Lock Assembly RH |
| *11 | Front Door Courtesy Light Switch Assembly RH | *12 | Front Door with Motor Lock Assembly RH |
| *13 | Park/Neutral Position Switch Assembly | - | - |

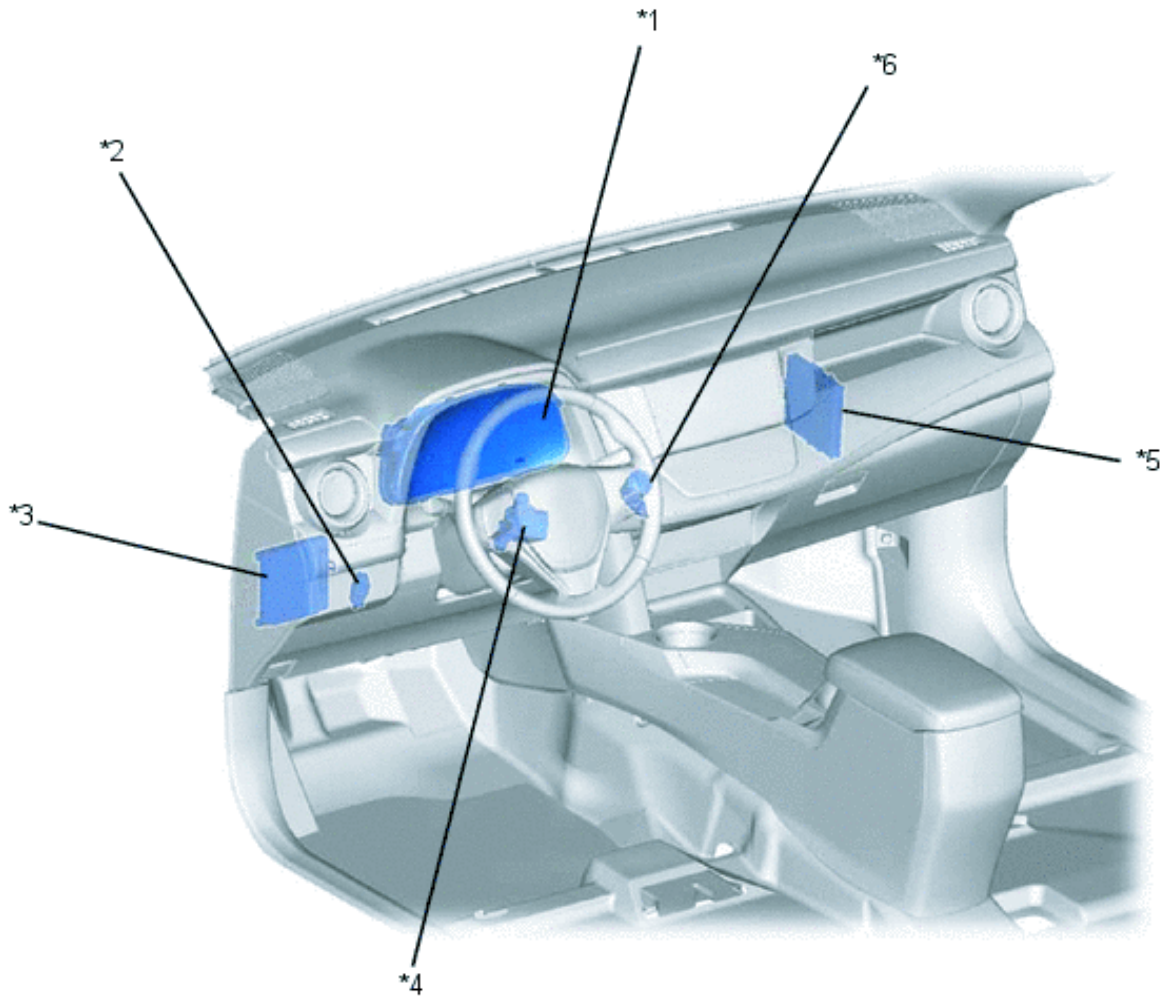


| | | | |
|---|---|---|---|
| *1 | Combination Meter Assembly | *2 | Stop Light Switch Assembly |
| *3 | Main Body ECU (Multiplex Network Body ECU) | *4 | Steering Lock ECU |
| *5 | Certification ECU (Smart Key ECU Assembly) | *6 | Engine Switch (Push Start Switch) |