| | | |
|---|---|---|
| **Last Modified:** 03-12-2013 | 6.4 F | **Doc ID:** NM1000000005Q6U |
| **Model Year:** 2013 | **Model:** RAV4 | **Prod Date Range:** [12/2012 - ] |
| **Title:** U760F AUTOMATIC TRANSMISSION / TRANSAXLE: AUTOMATIC TRANSAXLE SYSTEM: TRANSMISSION VALVE BODY; 2013 MY RAV4 [12/2012 - ] | | |

# TRANSMISSION VALVE BODY

## 1. CONSTRUCTION

(a) The valve body unit consists of a No. 1 upper valve body, a No. 2 upper valve body, a lower valve body and 7 shift solenoid valves (SL1, SL2, SL3, SL4, SLU, SLT, SL).

### Valve Body Unit

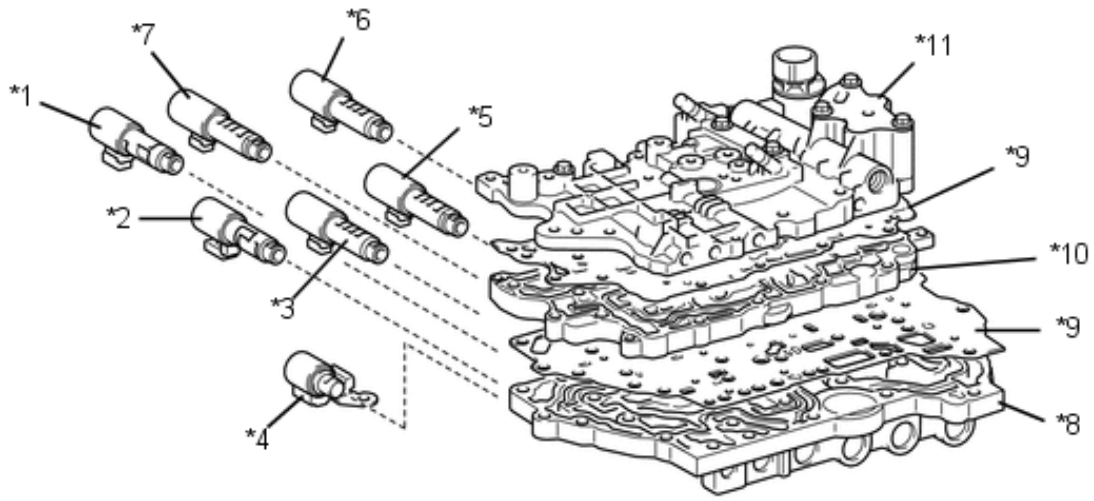


| | | | |
|---|---|---|---|
| *1 | Shift Solenoid Valve SLU | *2 | Shift Solenoid Valve SLT |
| *3 | Shift Solenoid Valve SL2 | *4 | Shift Solenoid Valve SL |
| *5 | Shift Solenoid Valve SL3 | *6 | Shift Solenoid Valve SL4 |
| *7 | Shift Solenoid Valve SL1 | *8 | Lower Valve Body |
| *9 | Plate | *10 | No. 1 Upper Valve Body |
| *11 | No. 2 Upper Valve Body | - | - |

### No. 1 Upper Valve Body

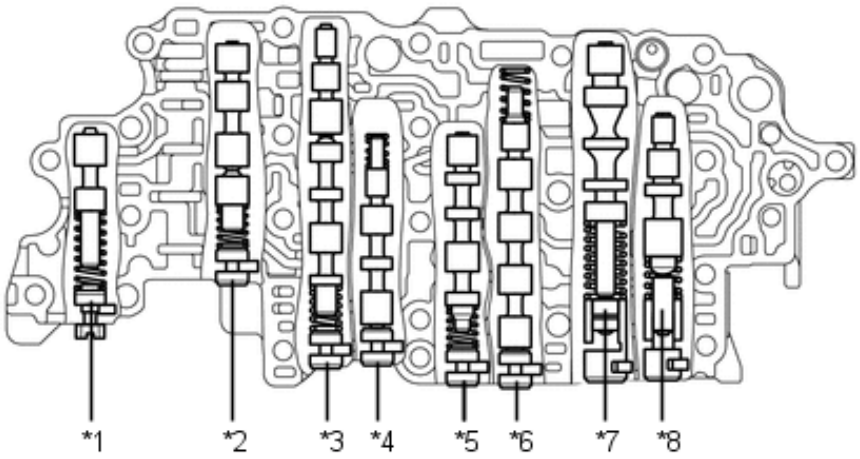


| | | | |
|---|---|---|---|
| *1 | Solenoid Modulator Valve | *2 | B2 Control Valve |
| *3 | B2 Apply Control Valve | *4 | Clutch Apply Control Valve |
| *5 | Clutch Control Valve | *6 | Sequence Valve |
| *7 | Primary Regulator Valve | *8 | B1 Apply Control Valve |

## No. 2 Upper Valve Body

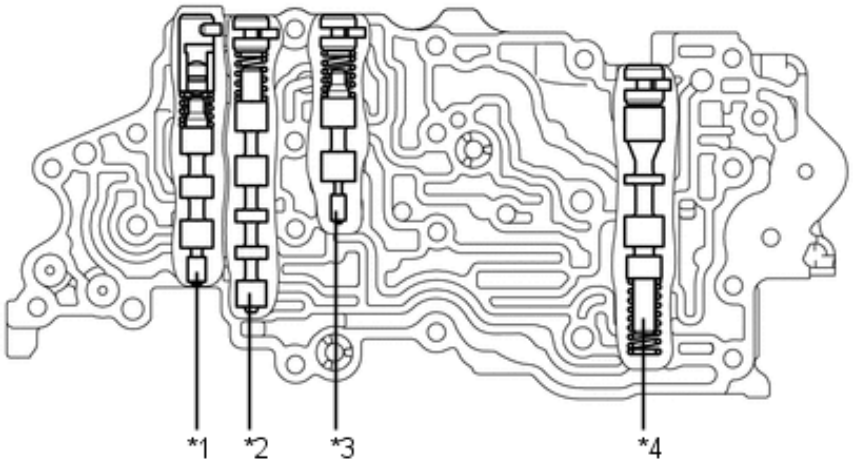


| | | | |
|---|---|---|---|
| *1 | Lock-up Control Valve | *2 | Lock-up Relay Valve |
| *3 | Reverse Sequence Valve | *4 | Secondary Regulator Valve |

## Lower Valve Body

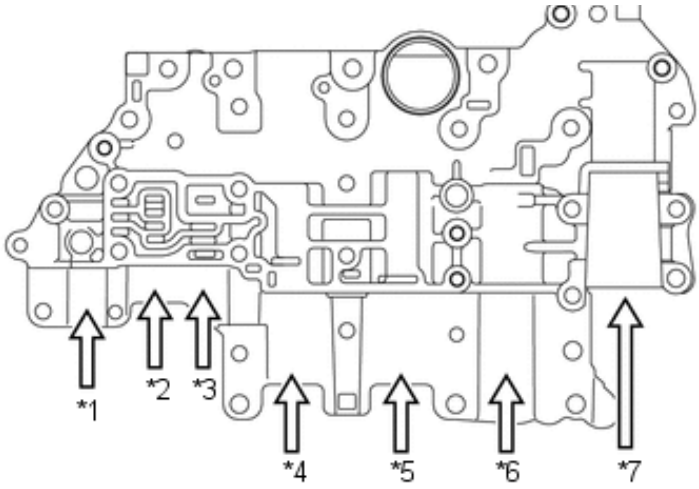


| | | | |
|---|---|---|---|
| *1 | Shift Solenoid Valve SL | *2 | Shift Solenoid Valve SLT |
| *3 | Shift Solenoid Valve SLU | *4 | Shift Solenoid Valve SL2 |
| *5 | Shift Solenoid Valve SL1 | *6 | Shift Solenoid Valve SL3 |
| *7 | Shift Solenoid Valve SL4 | - | - |