| | | |
|---|---|---|
| **Last Modified:** 03-12-2013 | 6.4 F | **Doc ID:** NM1000000005D8H |
| **Model Year:** 2013 | **Model:** RAV4 | **Prod Date Range:** [12/2012 - ] |
| **Title:** INTRODUCTION: FEATURES: EQUIPMENT; 2013 MY RAV4 [12/2012 - ] | | |

# EQUIPMENT

## 1. OUTLINE

(a) Interior

(1) The interior design aims to offer a new SUV driving pleasure by combining a "sporty cockpit-like driver's area" with a "spacious and open atmosphere inherent of an SUV", which expresses a bold structure based on functionality and a refined feel of the interior space.

(2) A clear and refined design realized by the structure that consists of shapes, quality materials and color schemes with making the best use of a functional layout.

(3) A feeling of a framed area and a spacious, open atmosphere: The driver's area is cockpit-like framed, (*a in illustration) while the soft padded instrument panel is extended beyond the vehicle centerline to create a wide feel. (*b in illustration) This gives a sense of unity between the framed driver's area and the front/rear passengers' area with a spacious, open atmosphere.

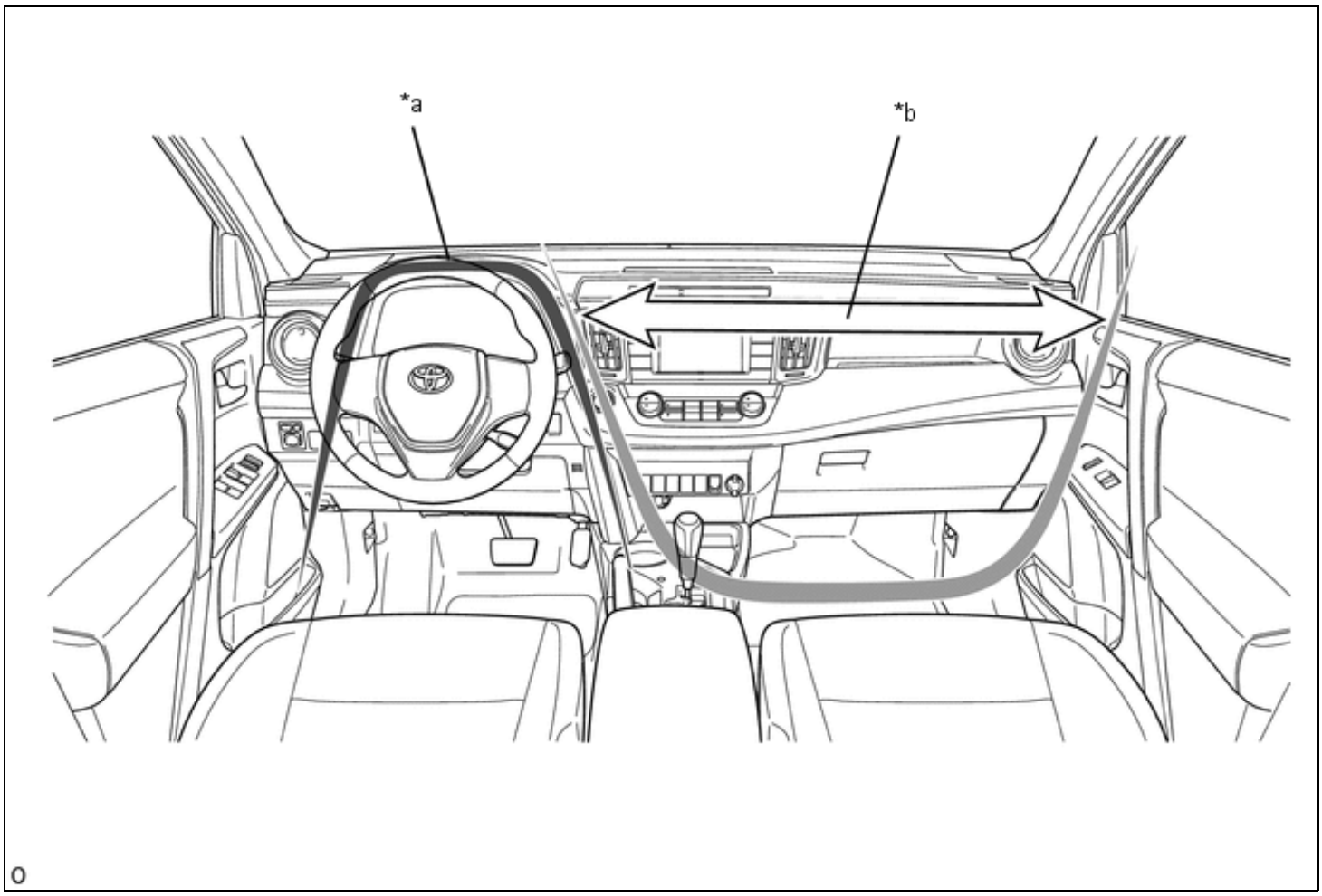


(b) Instrument Panel

(1) Realization of a combination of the "strong, stable impression by a bold architecture through axes" (*a in illustration) and a "refined and soothing impression by soft padding". (*b in illustration)

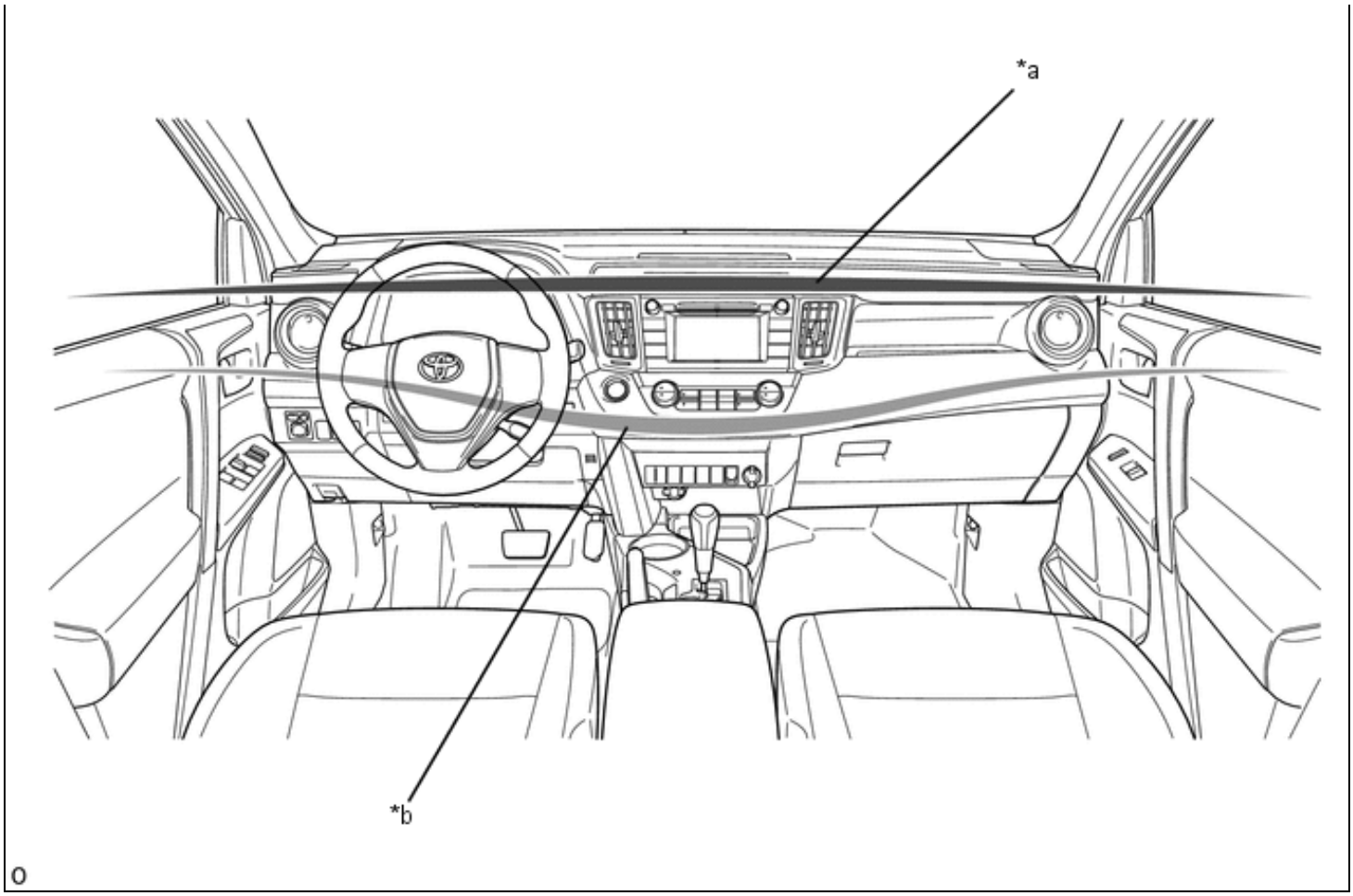


(2) Decoration panels and molding soft pads are used in each part of the instrument panel, thus achieving an improved quality.

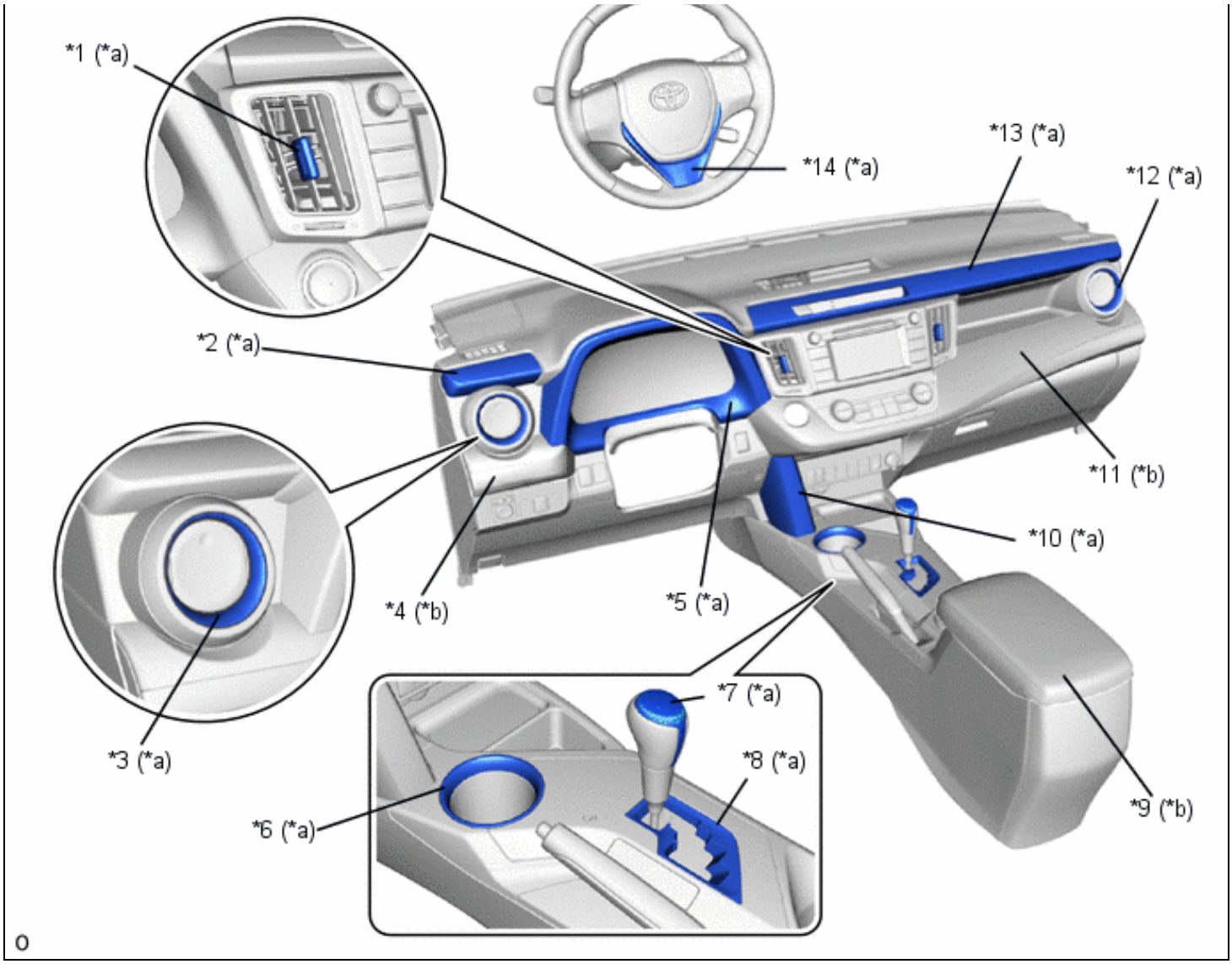


| | | | |
|---|---|---|---|
| *1 | Center Register | *2 | Driver Side Silver Panel |
| *3 | Driver Side Register | *4 | Driver Side Ornament |
| *5 | Meter Cluster | *6 | Cup Holder Ring |
| *7 | Shift Knob | *8 | Shift Gate Panel |
| *9 | Console Box Door | *10 | Center Lower Garnish |
| *11 | Passenger Side Soft Ornament | *12 | Passenger Side Register |
| *13 | Passenger Side Silver Panel | *14 | Steering |
| *a | Decorative Parts | *b | Leather or Artificial Leather Parts |

(3) A ring-shaped illumination is provided on the cup holder of the floor console in consideration for usability during nighttime. Blue is used as the illumination color in the whole cabin, thus contributing to the creation of a high-class interior space.

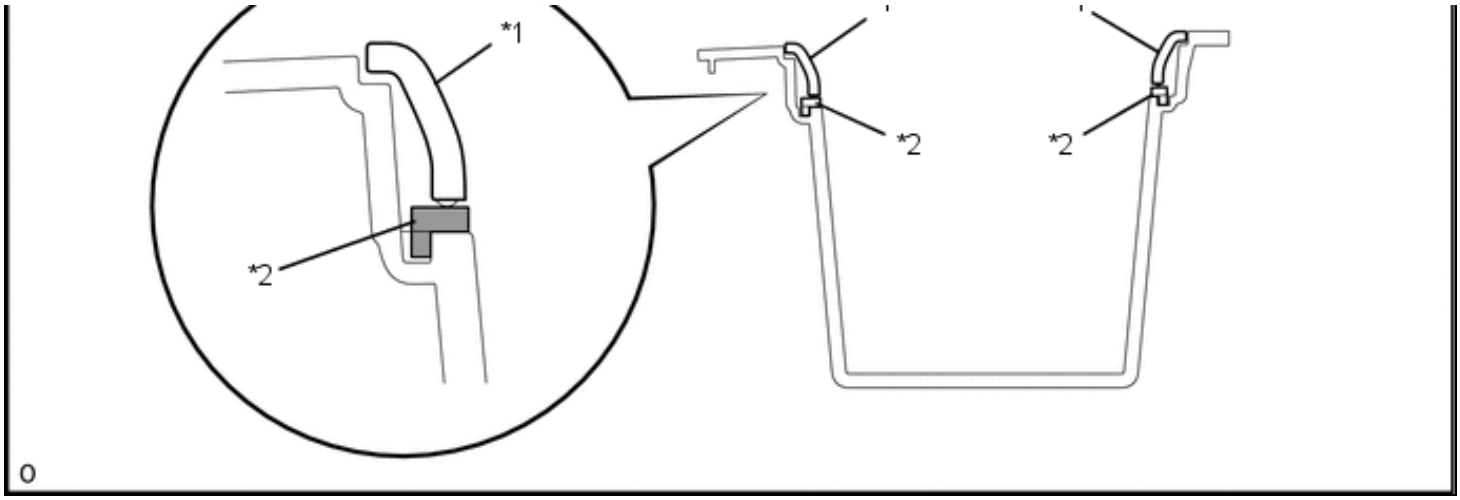


| | | | |
|---|---|---|---|
| *1 | Silver Painting Ring | *2 | Ring-shaped Blue Nighttime Illumination |

(4) An open tray is provided in the upper portion of the ornament for the front passenger seat to offer a lidless storage space which can be easily used. A soft mat is provided on the bottom surface of the tray.

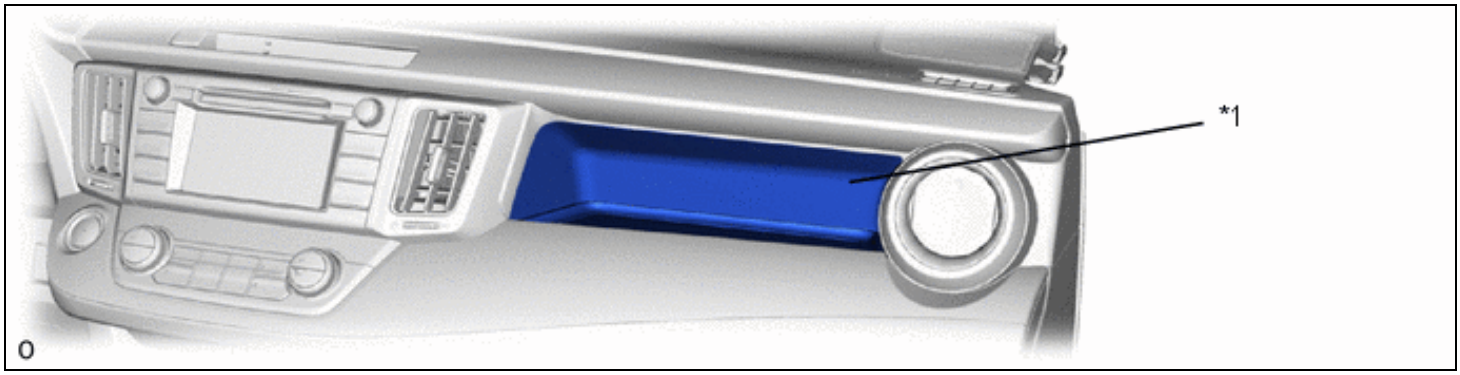


| | | | |
|---|---|---|---|
| *1 | Passenger Side Open Tray | - | - |

(5) Storage spaces, which were created with usability in mind, are provided in various places of the instrument panel, thus achieving improved convenience.

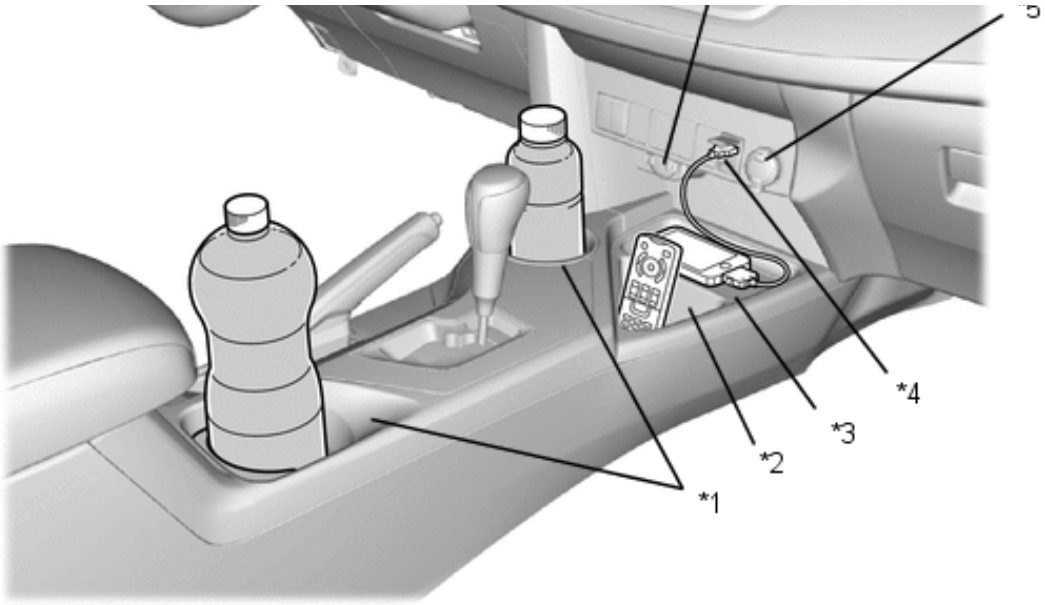


| | | | |
|---|---|---|---|
| *1 | Cup Holder | *2 | Delta Tray |
| *3 | Open Tray | *4 | Stereo Jack Adapter |
| *5 | Accessory Socket | - | - |

(6) A sliding door is used for the console box, which can move back and forth in accordance with the physical size of the user.

(7) An open tray on which a cellular phone or an audio player can be placed is provided in the front portion of the floor console.

(8) An external input terminal and an accessory socket are provided in the lower portion of the instrument panel.

(9) A deep delta tray, which can accommodate an audio player, etc., stood up on its side, is provided next to the console tray.

(10) Related functions are collectively positioned around the console tray. It is possible for the user to put an audio player on the console tray and listen to it while charging.

(11) A cup holder, which can accommodate a large size cup, is provided.

(12) A large size storage which can accommodate 18 CDs is provided in the console box.

(c) Door Trim

(1) Component layout that takes operability into consideration. (*a in illustration) Functional items such as switches, door handle, grip and storage placed at the front section. (*a in illustration) Soft padding used widely at the rear section that touches the passenger. (*b in illustration)

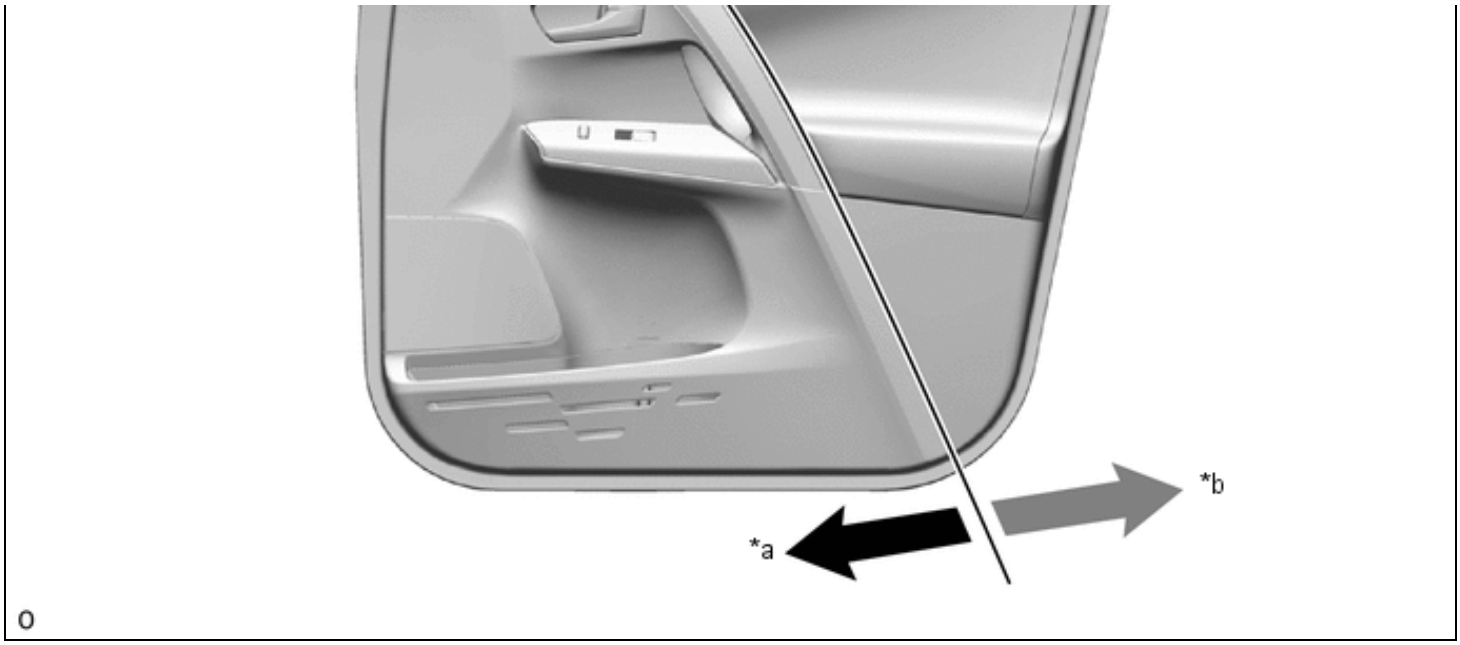


| | | | |
|---|---|---|---|
| *a | Front Side (Functional Area) | *b | Rear Side (Comfort Area) |

(2) Decorations and soft pads similar to those of the instrument panel are used.

(3) A bottle holder and an accessory pocket which can accommodate A4 size paper are provided in the lower portion of the front door trim.

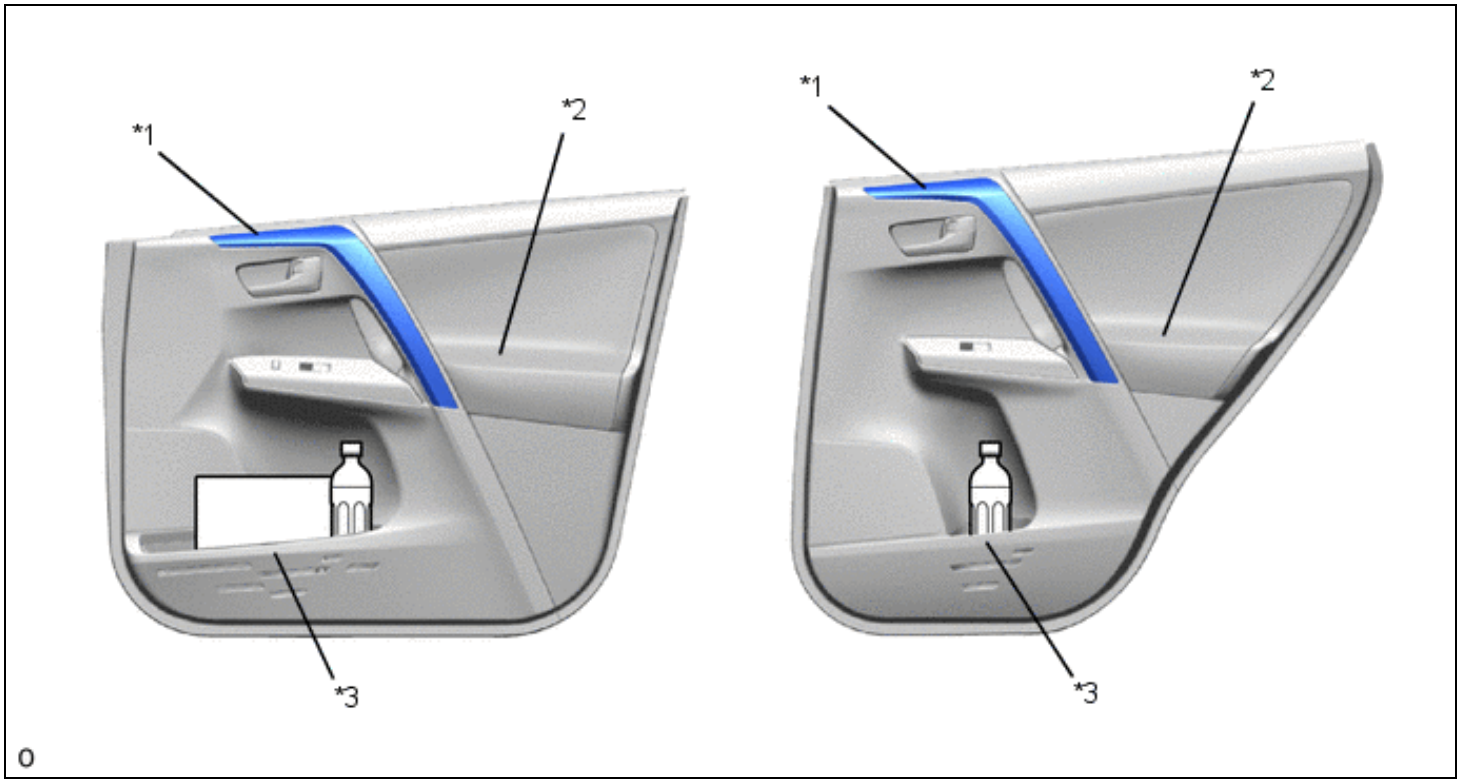


| | | | |
|---|---|---|---|
| *1 | Door Ornament (Decorative Parts) | *2 | Door Arm Rest (Leather Patrs) |
| *3 | Accessory Pocket or Bottle Holder | - | - |

(d) Center Cluster

(1) A simple switch arrangement which is horizontally laid out is used for the audio.

(2) Plating may be used on the opening area of the CD slot and the switch separator depending on the specification, thus producing a high-class feel.

(3) Switches and a display are arranged close to each other for the automatic air conditioning, thus taking into account operability and visibility.

(4) Plated rings are used for the dials of the air conditioning, thus taking improved quality into consideration.

### Models with Automatic Air Conditioning

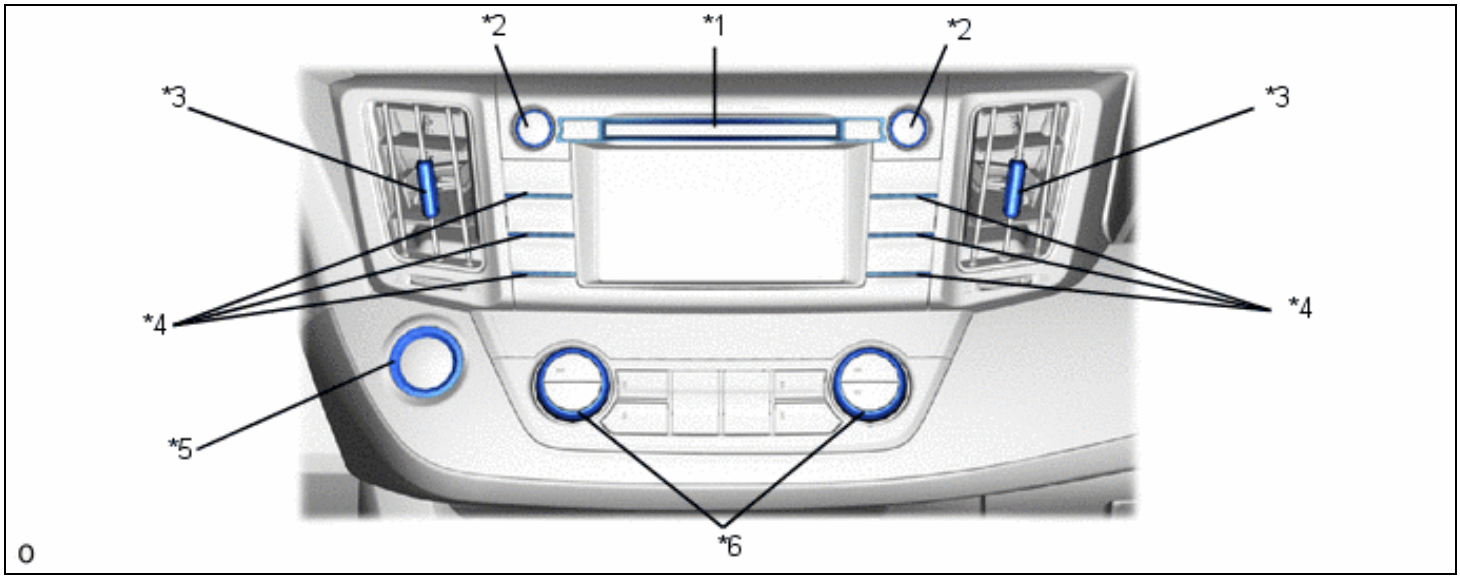


| | | | |
|---|---|---|---|
| *1 | CD Slot | *2 | Audio Dial |
| *3 | Center Register Knob | *4 | Separator between Switches |
| *5 | Push Start Switch (Ring) | *6 | Air Conditioning Dial (Ring) |

### Models with Manual Air Conditioning

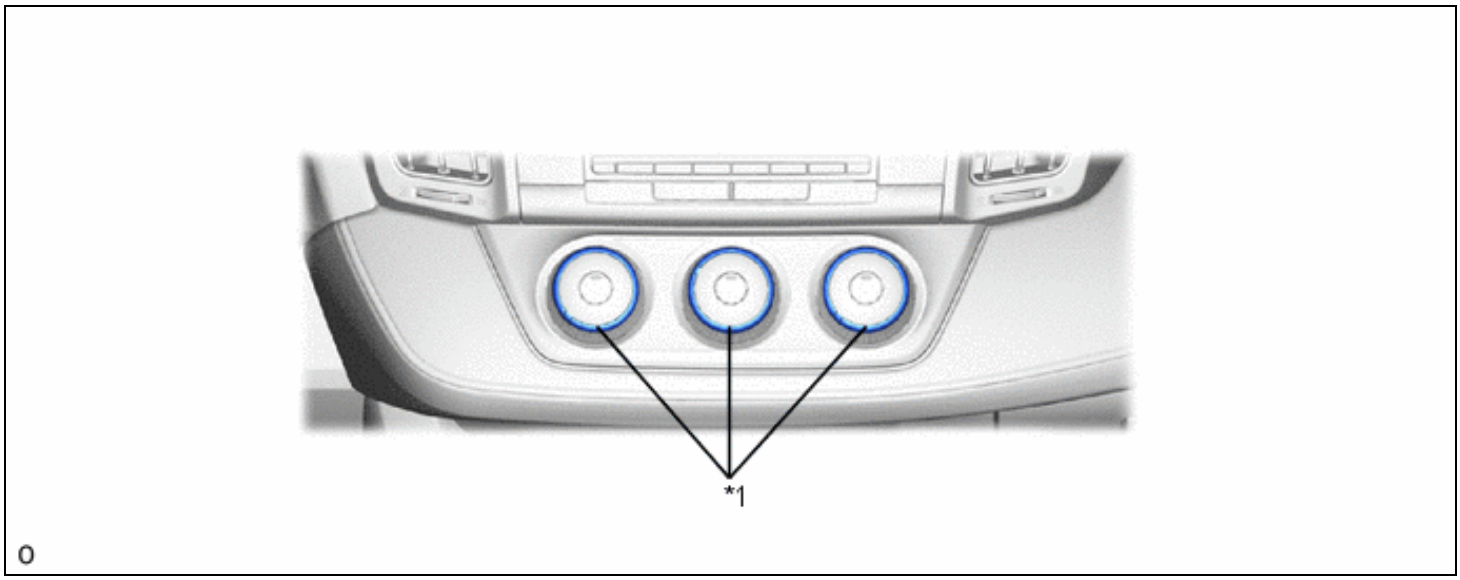


| | | | |
|---|---|---|---|
| *1 | Air Conditioning Dial (Ring) | - | - |

(e) Audio and Visual System

(1) XM satellite radio is provided. XM satellite radio is a subscription type digital broadcast service.

(2) Hybrid Digital (HD) radio is provided.

(f) Bluetooth Audio System

(1) The Bluetooth audio system is provided.

(g) Bluetooth Hands-free System

(1) The Bluetooth hands-free system is provided.

(h) Sliding Roof System

(1) The sliding roof system uses a single glass panel to perform the tilt up-and-down and slide open-and-close operations.

(i) Smart Key System

(1) The smart key system is provided.

(j) Monitor System

(1) To assist the driver in parking the vehicle by monitoring the area behind it, the rear view monitor system has a rear television camera assembly mounted on the back door.

(k) Blind Spot Monitor System

(1) The blind spot monitor system is provided.

(l) Mirror System

(1) The mirror heater system is provided.

(m) Intuitive Parking Assist System

(1) The intuitive parking assist system is provided.

(n) Parking Assist Monitor System

(1) The parking assist monitor system is provided.

(o) Cruise Control System

(1) The cruise control system is provided.

(p) Lane Departure Alert System

(1) The lane departure alert system is provided.

(q) Automatic Light Control System

(1) The automatic light control system is provided.

(r) Light Automatic Turn-off System

(1) The light automatic turn-off system is provided.

(s) Daytime Running Light

(1) The daytime running light system is provided.

(t) Automatic High Beam (AHB) System

(1) The AHB system is provided.

(u) Illuminated Entry System

(1) The illuminated entry system is provided.

(v) Power Back Door System

(1) The power back door system is provided.

(w) Power Door Lock System

(1) The power door lock system is provided.

(1) The power door lock system is provided.

(x) Windshield Deicer System

(1) The windshield deicer system uses a heater element in the windshield glass to help reduce the formation of ice where the front wipers rest.

(y) Window Defogger System

(1) The window defogger system uses a heater wire on the back door glass.

(z) Air Conditioning System

(1) The automatic air conditioning system or manual air conditioning system is provided.

(aa) Power Outlet Socket System

(1) The power outlet socket system is designed for use as a power supply for electrical appliances in the vehicle.

(2) DC 12 V power outlet socket assemblies are located in the lower portion of the instrument panel.

(ab) Combination Meter Assembly

(1) The analog display type combination meter assembly is used.

(2) The meter features a center speedometer with large scale markings and a red needle for a bold sporty look, and an outer silver frame is surrounded by a detailed, fine texture appropriate for the meter and gauge area to create a minute quality appearance.

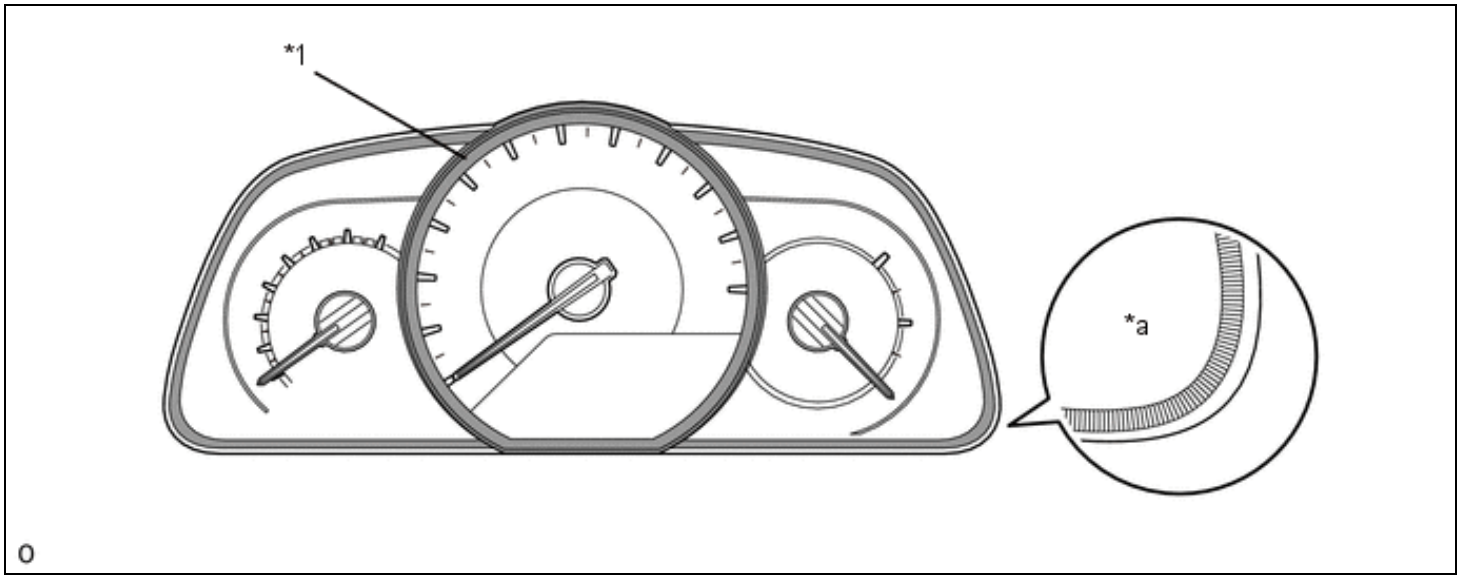


| | | | |
|---|---|---|---|
| *1 | Meter Ring | - | - |
| *a | Frame Texture | - | - |

(ac) Supplemental Restraint System

(1) The Supplemental Restraint System (SRS) driver and front passenger airbags are used as supplements to the seat belts to help reduce the shocks to the head and chest of the driver or front passenger in the event of a frontal collision.

(2) The SRS knee airbags are used as a supplement to the seat belt to help reduce the shock to the knee of the driver in the event of a frontal collision.

(3) The SRS front seat side airbags are used during a side collision to help reduce the impact to the chests of the driver and front passenger.

(4) The SRS curtain shield airbags are used in the event of a side or side rear collision to help reduce the impact to the heads of the front passenger or rear passengers.

(5) The SRS seat cushion airbags (front seat cushion airbag assemly RH) are used as a supplement to the seat belts to prevent the driver and front passenger from sliding forward in the event of a front impact collision.

(ad) Color

(1) Color List

| EXTERIOR COLOR | | INTERIOR COLOR |
|---|---|---|
| COLOR NO. | COLOR NAME | |
| 040 | Super White 2 | • Black<br>• Terra Cotta<br>• Gray<br>• Beige |
| 070 | White Pearl Crystal Shine | |
| 1F7 | Silver Metallic | |
| 1G3 | Gray Metallic | |
| 202 | Black | |
| 3R3 | Red Mica Metallic | |
| 4T3 | Bronze Mica Metallic | |
| 6V4 | Dark Green Mica | |
| 8V5 | Graysh Blue Metallic | |