| | | |
|---|---|---|
| **Last Modified:** 03-12-2013 | 6.4 F | **Doc ID:** NM1000000004HC9 |
| **Model Year:** 2013 | **Model:** RAV4 | **Prod Date Range:** [12/2012 - ] |
| **Title:** 2AR-FE ENGINE CONTROL: SFI SYSTEM: TUMBLE CONTROL VALVE POSITION SENSOR; 2013 MY RAV4 [12/2012 - ] | | |

# TUMBLE CONTROL VALVE POSITION SENSOR

## 1. CONSTRUCTION

(a) The non-contact type tumble control valve position sensor uses a Hall IC. It detects the tumble control valve opening angle.

(b) The sensor converts the magnetic flux density that changes when the magnetic yoke (located on the same axis as the tumble control valve shaft) rotates around the Hall IC into electric signals and sends them to the ECM.

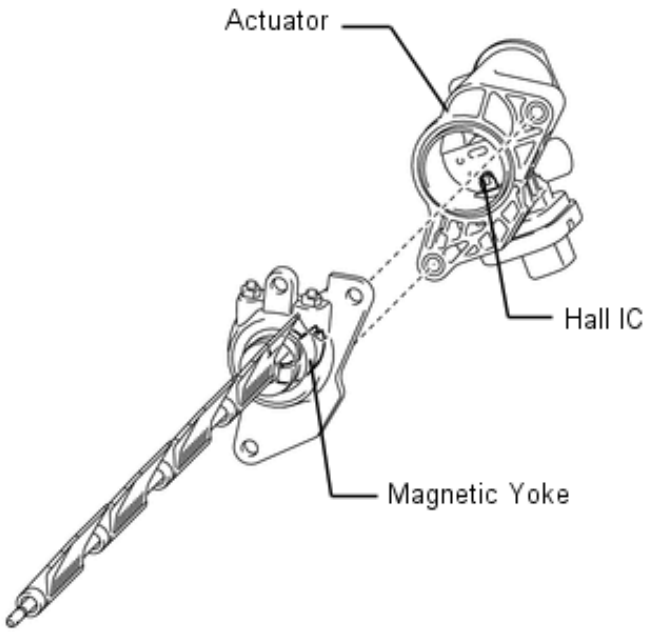
Actuator
Hall IC
Magnetic Yoke

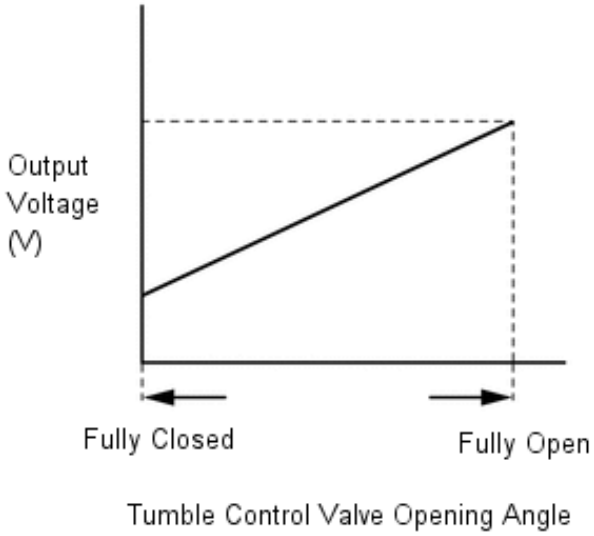
Output
Voltage
(V)
Fully Closed
Fully Open
Tumble Control Valve Opening Angle

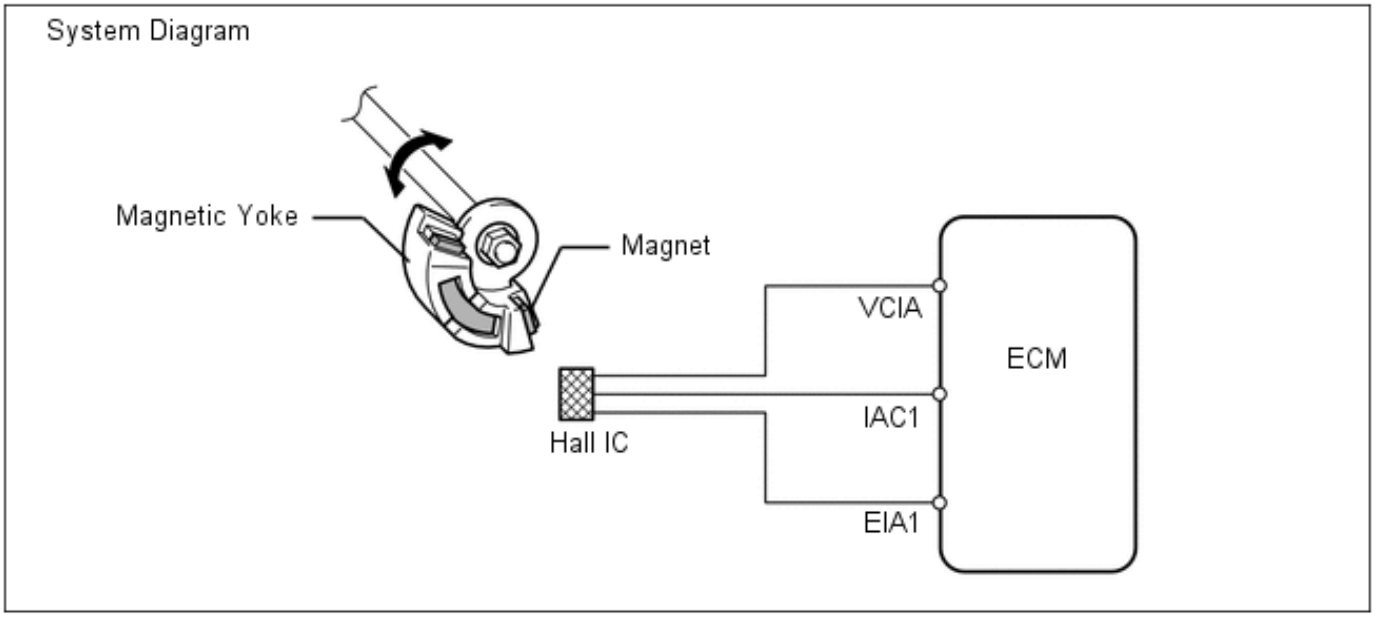
System Diagram
Magnetic Yoke
Magnet
Hall IC
VCIA
IAC1
EIA1
ECM