| | | |
|---|---|---|
| **Last Modified:** 03-12-2013 | 6.4 F | **Doc ID:** NM1000000005PUV |
| **Model Year:** 2013 | **Model:** RAV4 | **Prod Date Range:** [12/2012 - ] |
| **Title:** POWER ASSIST SYSTEMS: POWER STEERING SYSTEM: STEERING GEAR; 2013 MY RAV4 [12/2012 - ] | | |

# STEERING GEAR

## 1. CONSTRUCTION

(a) Operability is ensured through a lightweight, compact rack and pinion type steering gear assembly.

(b) A light weight has been achieved through a unified aluminum housing unit.

(c) To keep the steering rigidity, the steering gear assembly is installed in the front suspension crossmember sub-assembly directly without elastic material.

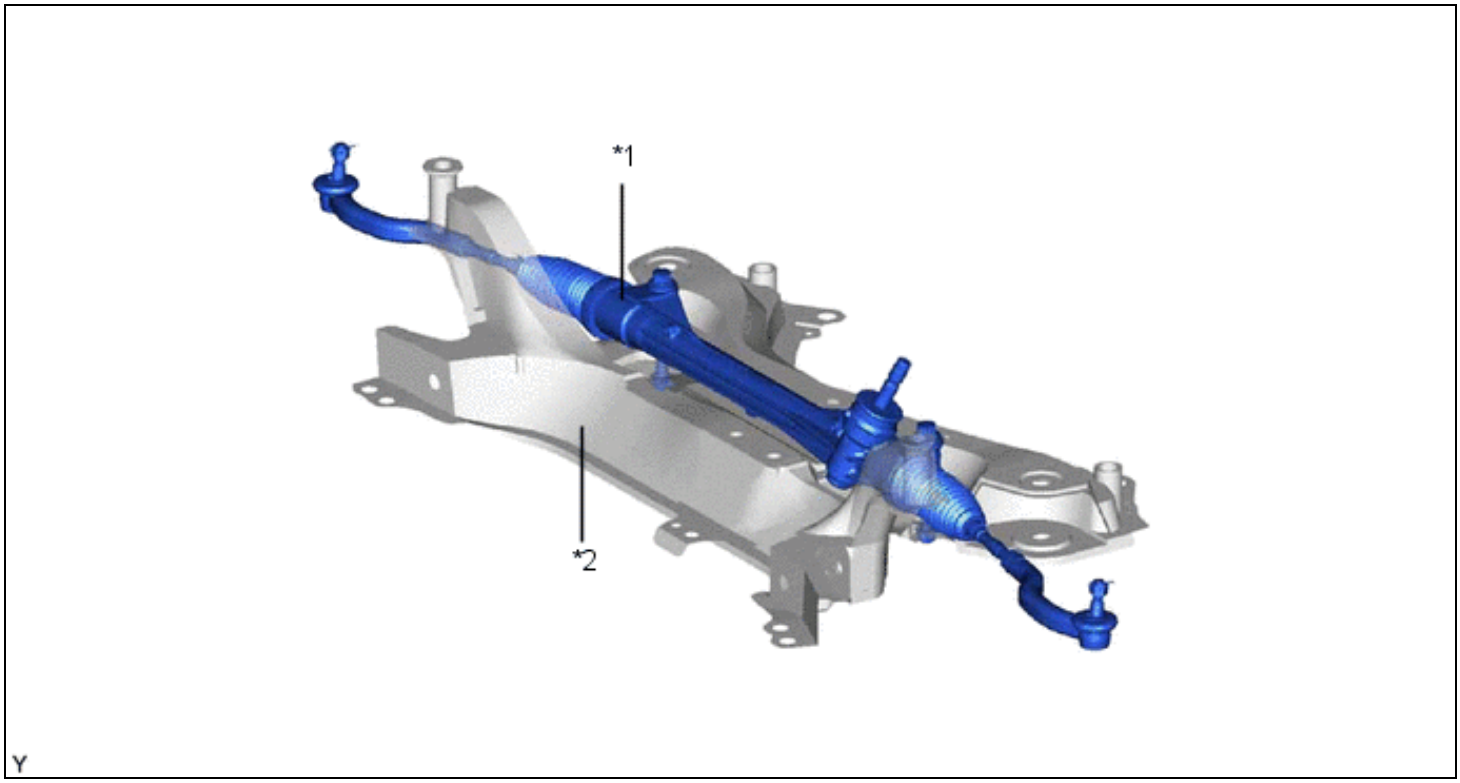


| | | | |
|---|---|---|---|
| *1 | Steering Gear Assembly | *2 | Front Suspension Crossmember Sub-assembly |