| | | |
|---|---|---|
| **Last Modified:** 03-12-2013 | 6.4 F | **Doc ID:** NM1000000005PUP |
| **Model Year:** 2013 | **Model:** RAV4 | **Prod Date Range:** [12/2012 - ] |
| **Title:** BRAKE CONTROL / DYNAMIC CONTROL SYSTEMS: BRAKE CONTROL SYSTEM: PARTS LOCATION; 2013 MY RAV4 [12/2012 - ] | | |

# PARTS LOCATION

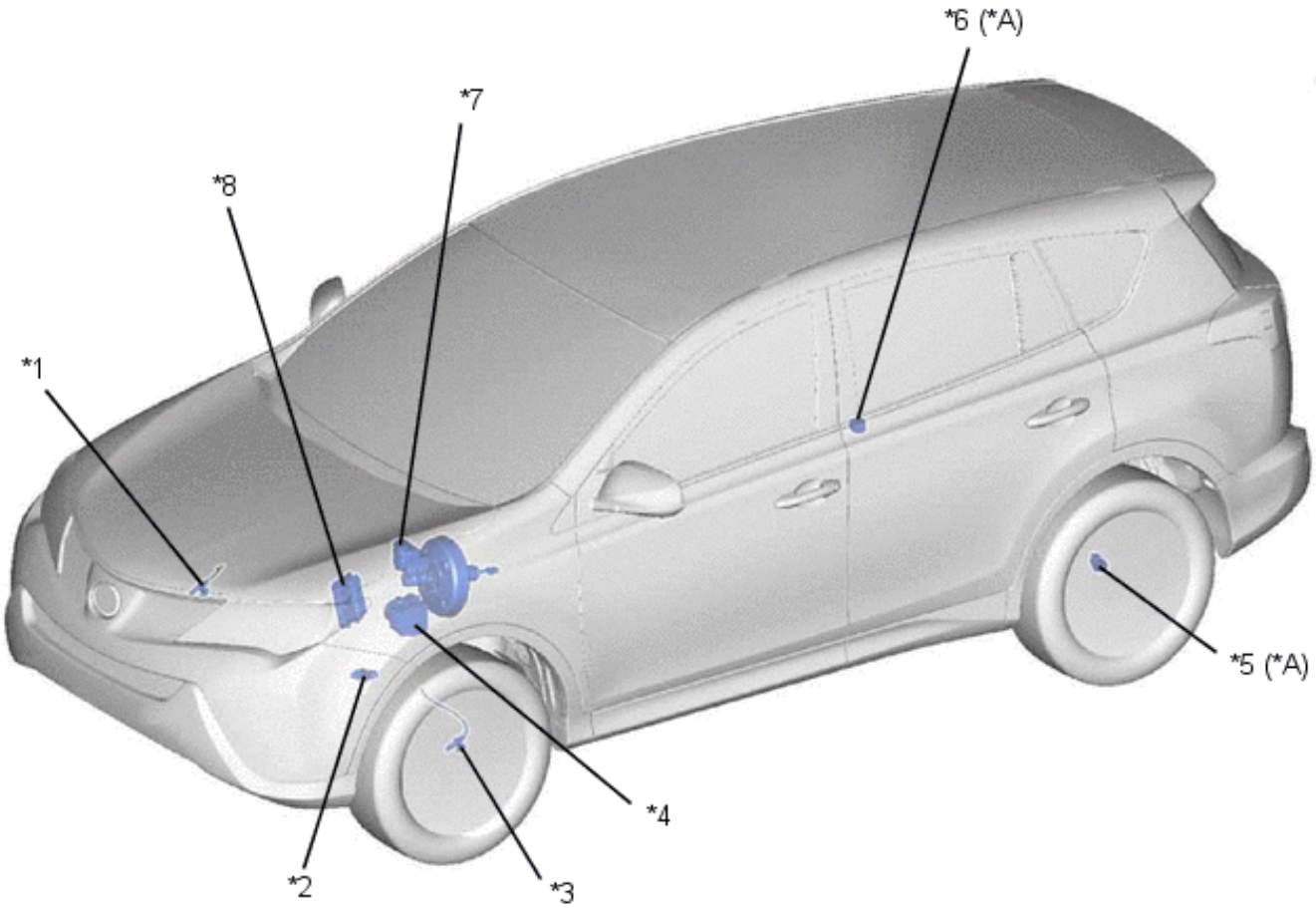


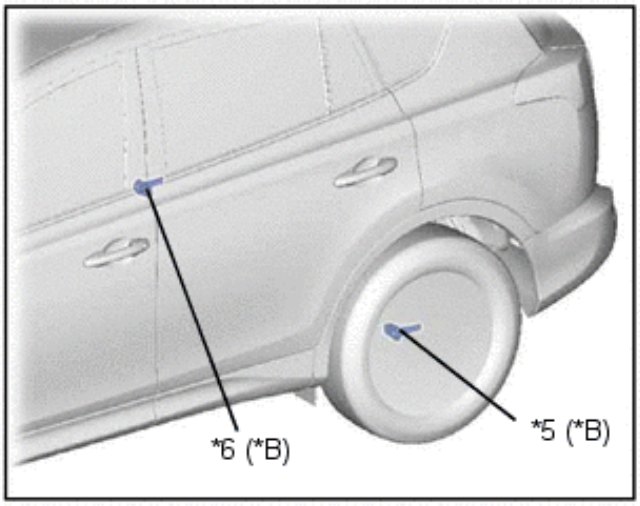


Y

| | | | |
|---|---|---|---|
| *A | 2WD Models | *B | AWD Models |
| *1 | Front Speed Sensor RH | *2 | Park/Neutral Position Switch Assembly |
| *3 | Front Speed Sensor LH | *4 | Brake Actuator Assembly<br>• Skid Control ECU<br>• Master Cylinder Pressure Sensor |
| *5 | Rear Speed Sensor LH | *6 | Rear Speed Sensor RH |

| | | | |
|---|---|---|---|
| *7 | Brake Booster Assembly<br>• Brake Fluid Level Warning Switch | *8 | ECM |

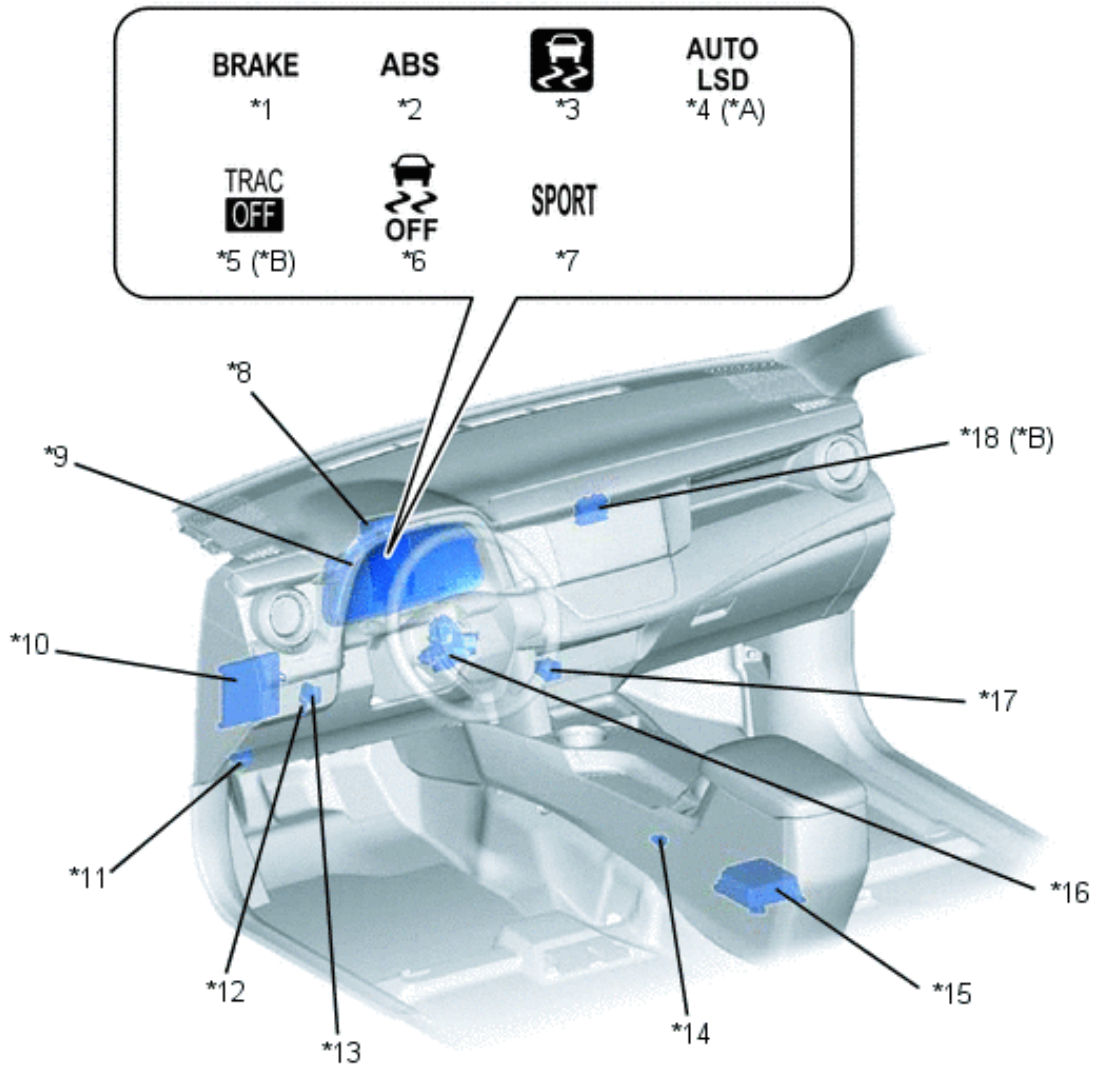


Y

| | | | |
|---|---|---|---|
| *A | 2WD Models | *B | AWD Models |
| *1 | Brake Warning Light | *2 | ABS Warning Light |
| *3 | Slip Indicator Light | *4 | Auto LSD Indicator Light |
| *5 | TRAC OFF Indicator Light | *6 | VSC OFF Indicator Light |
| *7 | Sport Mode Indicator Light | *8 | Power Steering ECU Assembly |
| *9 | Combination Meter Assembly<br>• Buzzer | *10 | Main Body ECU (Multiplex Network Body ECU) |
| *11 | DLC3 | *12 | Stop Light Switch Assembly |
| *13 | VSC OFF Switch (Traction Control Switch) | *14 | Parking Brake Switch Assembly |
| | Center Airbag Sensor Assembly | | |

| | | | |
|---|---|---|---|
| *15 | • Yawrate and Deceleration Sensor | *16 | Steering Sensor |
| *17 | Sport Mode Switch | *18 | 4WD ECU Assembly |