| | | |
|---|---|---|
| **Last Modified:** 03-12-2013 | 6.4 F | **Doc ID:** NM1000000005G0O |
| **Model Year:** 2013 | **Model:** RAV4 | **Prod Date Range:** [12/2012 - ] |
| **Title:** THEFT DETERRENT / KEYLESS ENTRY: SMART KEY SYSTEM: CERTIFICATION ECU; 2013 MY RAV4 [12/2012 - ] | | |

# CERTIFICATION ECU

## 1. CONSTRUCTION

(a) The certification ECU includes the IG1 relay and IG2 relay actuation circuits, CPU and hold circuit.

(b) The hold circuit is provided to prevent the power supply to the relays from being cut off when an abnormality occurs in the IG1 relay and/or IG2 relay actuation circuits while driving.

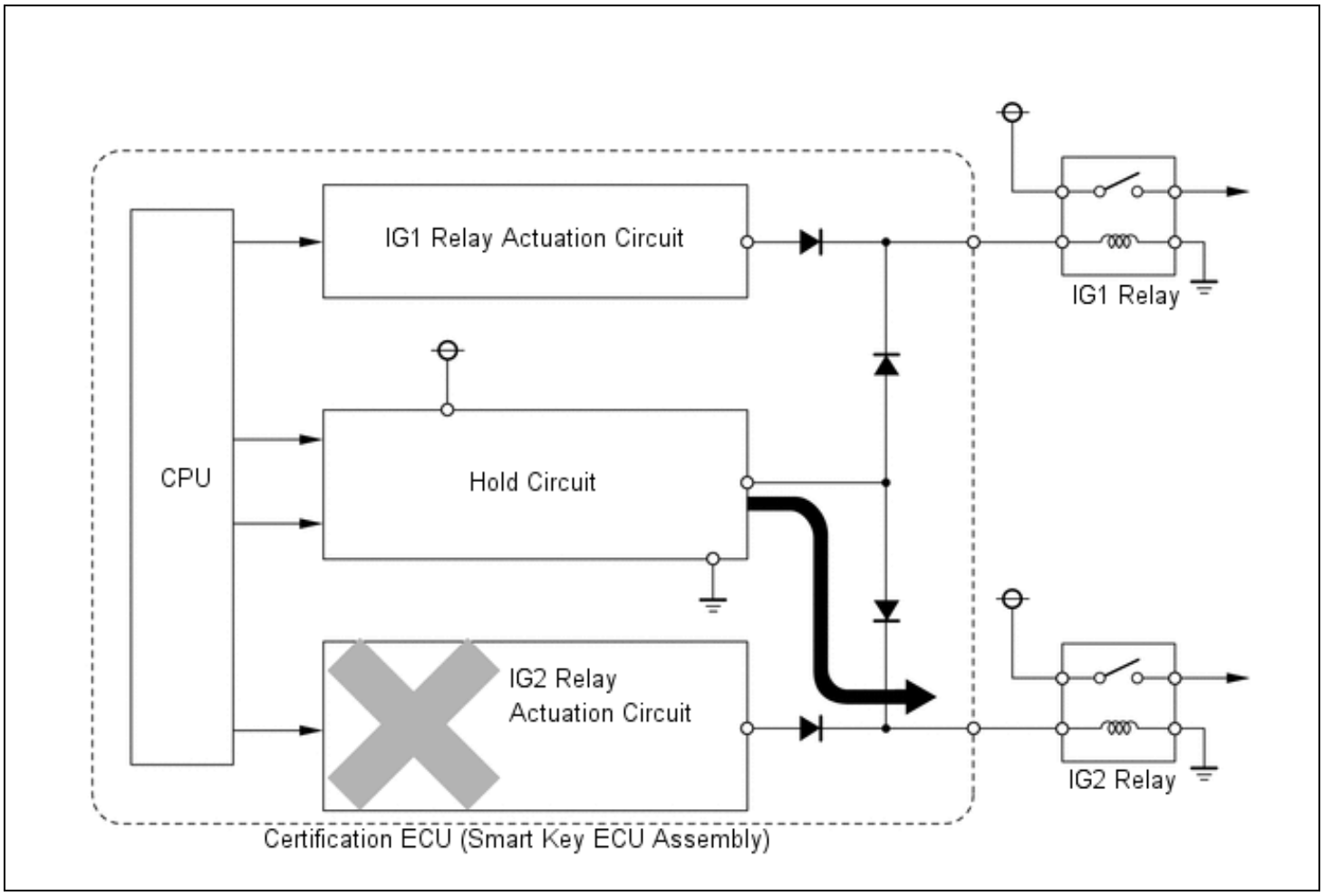


**HINT:**

The certification ECU constantly stores the present power source mode in its memory. Therefore, if the power to the certification ECU is interrupted due to the removal of the battery, the certification ECU restores the power source after the battery is reconnected. For this reason, if the battery is removed when the power source is in a mode other than off, the power will be restored to the vehicle at the same time the power is restored to the certification ECU by reconnecting the battery. Therefore, before removing the battery, be sure to turn the power source off.