| | | |
|---|---|---|
| **Last Modified:** 03-12-2013 | 6.4 F | **Doc ID:** NM1000000004IEH |
| **Model Year:** 2013 | **Model:** RAV4 | **Prod Date Range:** [12/2012 - ] |
| **Title:** SUPPLEMENTAL RESTRAINT SYSTEMS: AIRBAG SYSTEM: DRIVER KNEE AIRBAG; 2013 MY RAV4 [12/2012 - ] | | |

# DRIVER KNEE AIRBAG

## 1. CONSTRUCTION

(a) The lower No. 1 instrument panel airbag assembly consists of an airbag door, an inflator and a bag.

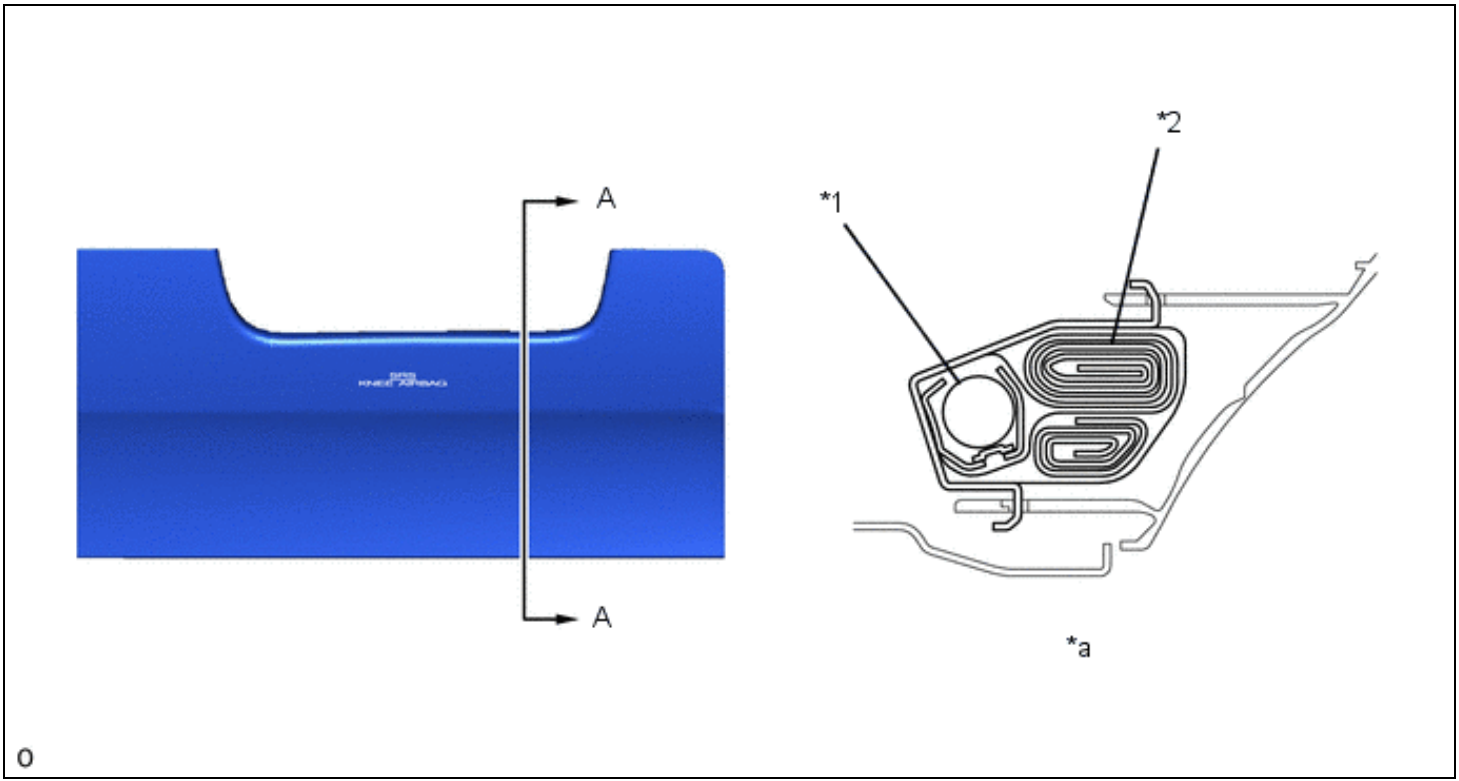


| | | | |
|---|---|---|---|
| *1 | Inflator | *2 | Bag |
| *a | A - A Cross Section | - | - |