| | | |
|---|---|---|
| **Last Modified:** 03-12-2013 | 6.4 F | **Doc ID:** NM1000000005PUG |
| **Model Year:** 2013 | **Model:** RAV4 | **Prod Date Range:** [12/2012 - ] |
| **Title:** BRAKE CONTROL / DYNAMIC CONTROL SYSTEMS: BRAKE CONTROL SYSTEM: BRAKE CONTROL; 2013 MY RAV4 [12/2012 - ] | | |

# BRAKE CONTROL

### 1. FUNCTION OF MAIN COMPONENTS

| COMPONENT | | FUNCTION |
|---|---|---|
| Brake Actuator Assembly | Solenoid Relay (Built into Skid Control ECU) | Supplies power to the solenoid valves. |
| | Motor Relay (Built into Skid Control ECU) | Supplies power to the pump motor. |
| | Motor Cut Relay (Built into Skid Control ECU) | Cuts the power to the pump motor when the motor relay malfunctions. |
| | Solenoid Valves | Change the fluid path based on the signals from the skid control ECU during the operation of the brake control system functions in order to control the fluid pressure applied to the wheel cylinders. |
| | Pump Motor | Drives the pumps inside the brake actuator. |
| | Master Cylinder Pressure Sensor | Detects the master cylinder pressure. |
| Speed Sensors | | Detect the wheel speed of each of the 4 wheels. |
| Steering Sensor | | Detects the steering direction and angle of the steering wheel. |
| Stop Light Switch Assembly | | Detects the brake pedal depressing signal. |
| Parking Brake Switch Assembly | | Detects the parking brake lever status. |
| Brake Fluid Level Warning Switch | | Detects the brake fluid level. |
| VSC OFF Switch (Traction Control Switch) | | Enables the driver to select normal mode, TRAC OFF mode or VSC OFF mode. |
| Sport Mode Switch | | Turns the Sport mode on and off. |
| Skid Control ECU (Built into Brake Actuator Assembly) | | • Judges the vehicle driving condition based on the signals from each ECU, sensor and switch, and sends the brake control signals to the brake actuator.<br>• Requests steering torque assist during cooperative control with EPS.<br>• Requests torque distribution between the front and rear wheels during cooperative control with AWD.*1 |
| | | • Outputs signals such as the shift position signal, Sport mode signal, |

| | | |
|---|---|---|
| ECM | | throttle position signal and engine speed signal to the skid control ECU via CAN communication.<br>• Controls the engine output based on the signals from the skid control ECU. |
| Power Steering ECU Assembly | | Operates in cooperation with the skid control ECU to control the steering assist torque. |
| 4WD ECU Assembly*1 | | Operates in cooperation with the skid control ECU to control the torque distribution between the front and rear wheels. |
| Center Airbag Sensor Assembly<br>• Yawrate and Deceleration Sensor | | Detects the vehicle's yaw rate, longitudinal and lateral acceleration, and sends the detection signals. |
| Main Body ECU (Multiplex Network Body ECU) | | Outputs signals such as the parking brake signal to the skid control ECU via CAN communication. |
| Combination Meter Assembly | Brake Warning Light | • Illuminates to alert the driver when the skid control ECU detects a malfunction in the EBD or brake system.<br>• Illuminates to alert the driver when the brake fluid level is low.<br>• Illuminates to inform the driver when the parking brake lever is pulled up. |
| | ABS Warning Light | Illuminates to alert the driver when the skid control ECU detects a malfunction in the ABS. |
| | Slip Indicator Light | • Blinks to inform the driver when the Auto LSD*2, TRAC or VSC is operational.<br>• Illuminates to alert the driver when the skid control ECU detects a malfunction in the brake control function. |
| | Auto LSD Indicator Light*2 | Illuminates to inform the driver when Auto LSD is available. |
| | TRAC OFF Indicator Light*1 | Illuminates to inform the driver when TRAC OFF Mode or VSC OFF Mode is selected. |
| | VSC OFF Indicator Light | Illuminates to inform the driver when VSC OFF Mode is selected. |
| | Sport Mode Indicator Light | Illuminates to inform the driver that Sport mode engaged. |
| | Buzzer | Emits a warning sound to alert the driver when driving while the parking brake is applied. |

*1: AWD models
*2: 2WD models

## 2. SYSTEM CONTROL

**Electronic Control of Brake Control System**

| CONTROL | OUTLINE |
|---|---|

| | |
|---|---|
| Anti-lock Brake System (ABS) | The ABS helps prevent the wheels from locking when the brakes are applied firmly or when braking on a slippery surface. |
| Electronic Brake Force Distribution (EBD) | The EBD control utilizes ABS, achieving proper brake force distribution between the front and rear wheels in accordance with the driving conditions. In addition, during braking while cornering, the EBD also controls the brake forces of the right and left wheels, helping maintain vehicle behavior. |
| Brake Assist | The primary purpose of brake assist is to provide an auxiliary brake force to assist a driver who cannot generate a large brake force during emergency braking, thus helping ensure the vehicle's braking performance.<br>If the brake booster malfunctions and the skid control ECU judges that the brake pedal force applied by the driver is not sufficient to ensure adequate braking force, brake assist is used to enhance the braking force. |
| Auto LSD | The Auto LSD uses a TRAC to achieve Limited Slip Differential (LSD) capability. The Auto LSD allows for greater traction control than the TRAC, ensuring startability and traction on sand or other road surfaces that present high degrees of drive resistance. |
| Traction Control (TRAC) | The TRAC helps restrain the slippage of the drive wheels if the driver depresses the accelerator pedal excessively when starting off or accelerating on a slippery surface. |
| Vehicle Stability Control (VSC) | The VSC helps restrain sideways slippage of the vehicle during a strong front wheel skid or a strong rear wheel skid, such as may occur while cornering. |
| Cooperative Control with Electric Power Steering (EPS) | This performs cooperative control with the power steering ECU assembly in order to provide steering assist in accordance with the operating conditions of the vehicle. |
| Cooperative Control with AWD System | This performs cooperative control with the 4WD ECU assembly in order to control the drive torque of the front and rear wheels in accordance with the operating conditions of the vehicle. |

(a) Anti-lock Brake System (ABS)

(1) The ABS prevents the wheels from locking during sudden braking or braking on a slippery surface. The ABS provides the proper braking force when the vehicle slips, thus ensuring vehicle stability and excellent braking performance.

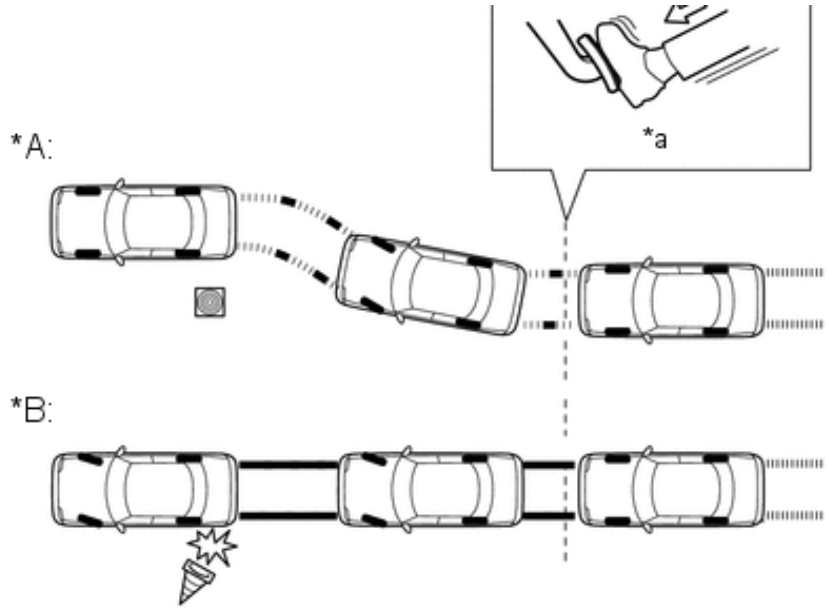


| | | | |
|---|---|---|---|
| *A | With ABS | *B | Without ABS |
| *a | Brake Operation | - | - |

(b) Electronic Brake Force Distribution (EBD)

(1) The EBD controls the brake force that acts on the rear wheels in accordance with the changes in the vehicle conditions such as load factors or deceleration in order to ensure excellent braking performance.

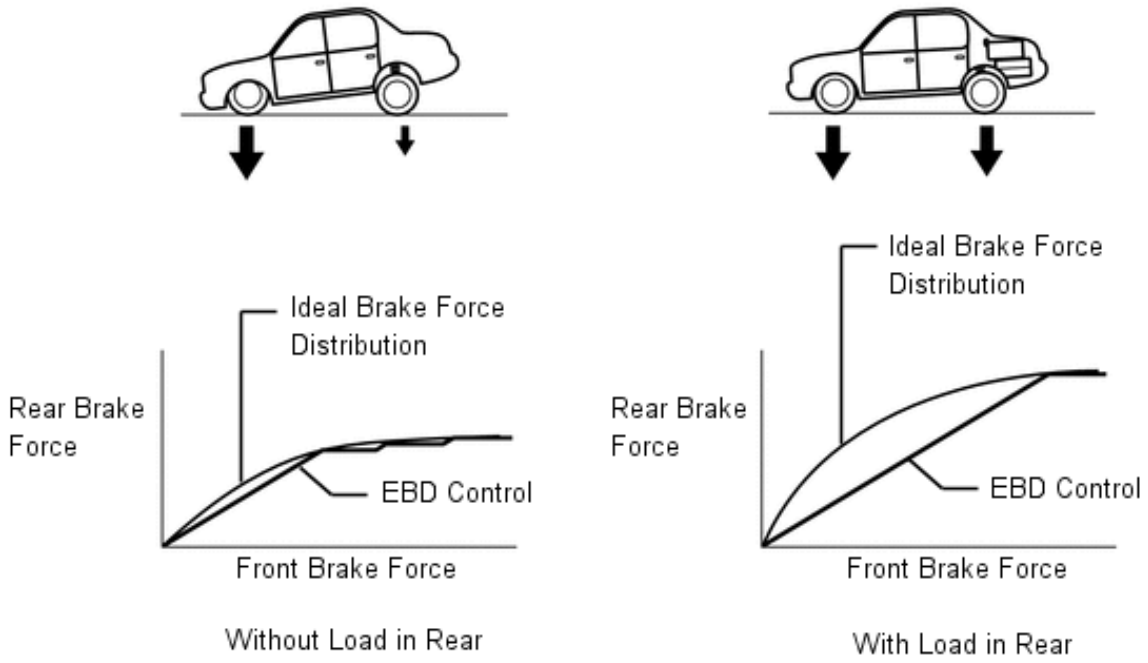


(2) During braking while cornering, this function controls the brake force that acts on the left and right wheels in accordance with the vehicle conditions at that time. This ensures vehicle stability and excellent braking performance.

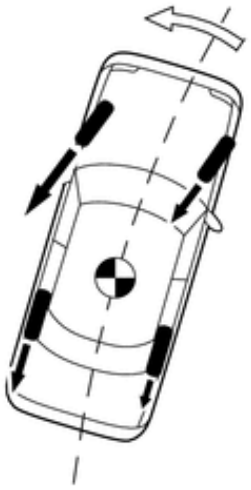

| | | | |
|---|---|---|---|
| ➡ | Brake Force | ⇨ | Control Moment |

(c) Brake Assist

(1) In the brake assist, the skid control ECU calculates the speed and the amount of the brake pedal application based on the signals from the master cylinder pressure sensor and then determines the intention of the driver to make an emergency brake application. If the skid control ECU determines that the driver intends to make an emergency brake application, this function activates the brake actuator to increase the brake fluid pressure, which increases the brake force.

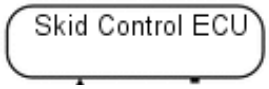

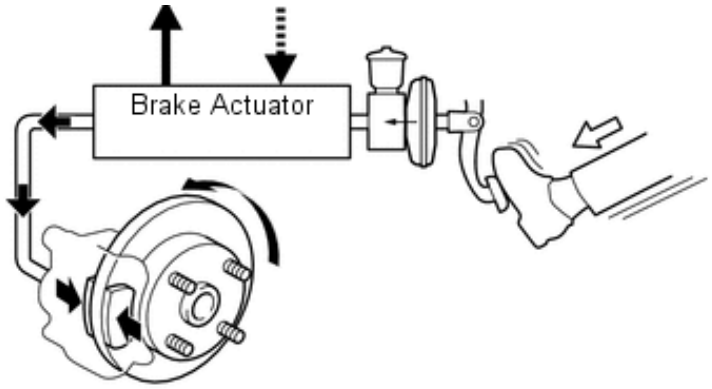


Fluid Pressure Increased by Brake Actuator

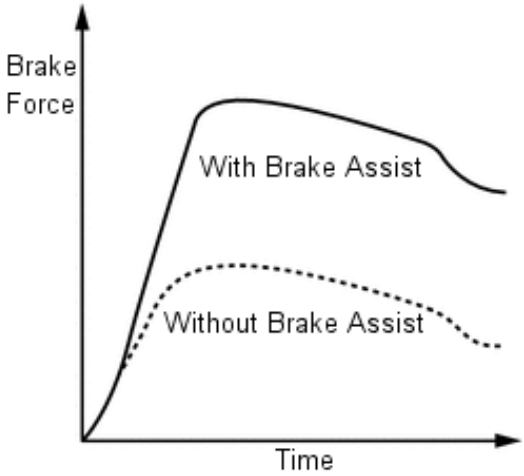


(d) Auto LSD

(1) The Auto LSD achieves the equivalent functions of a Limited Slip Differential (LSD) through the use of a traction control function. For this reason, the contents of the brake control are the same in both the Auto LSD and TRAC. When the driver presses the Auto LSD switch, this function achieves the LSD effect by regulating the hydraulic pressure that acts on the drive wheels and controlling the engine output in accordance with the amount of pedal effort applied on the accelerator.

(2) The TRAC enhances the start-off performance of the vehicle during low-resistance surface conditions, such as snow or mud, by restricting the acceleration effort during a start-off in order to prevent the wheels from spinning.

(3) On the other hand, the Auto LSD tends to enhance the acceleration effort somewhat in order to apply greater drive torque to the wheel when it is in contact with the ground. Thus, this function helps the vehicle to become unstuck if a wheel loses its grip, and enhances the vehicle's start-off performance on high-resistance surface such as gravel roads.

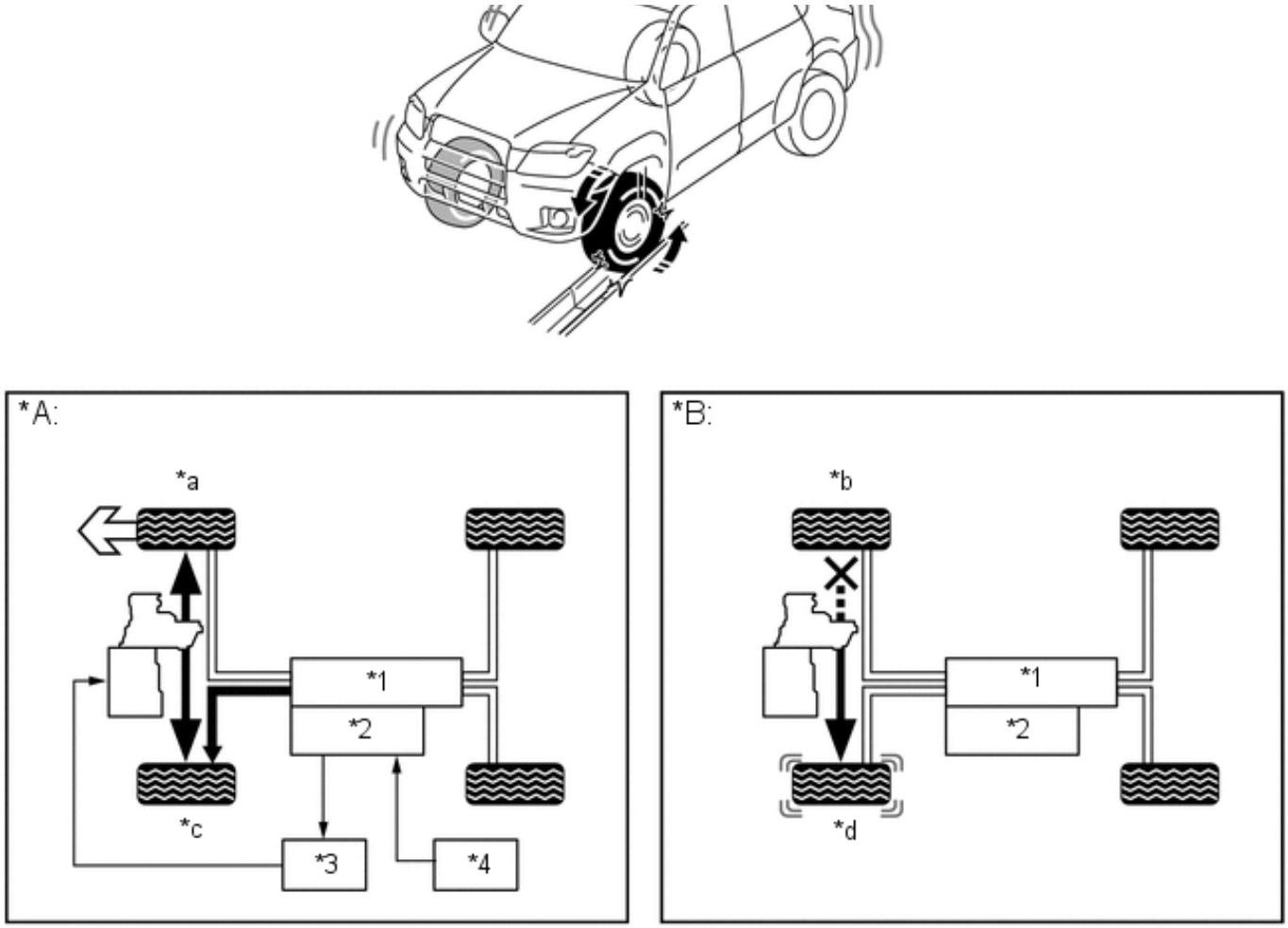


| | | | |
|---|---|---|---|
| *A | With Auto LSD | *B | Without Auto LSD |
| *1 | Brake Actuator | *2 | Skid Control ECU |
| *3 | ECM | *4 | VSC OFF Switch |
| *a | Traction | *b | No Traction |
| *c | Braking | *d | Slipping |

(e) Traction Control (TRAC)

(1) The TRAC helps prevent the drive wheels from slipping if the driver depresses the accelerator pedal excessively when starting off or accelerating on a slippery surface. Simultaneously with the hydraulic brake control of the drive wheels, the skid control ECU makes a request to the ECM to effect engine output control. This produces the drive force that suits the driving conditions in order to ensure the proper start-off acceleration.

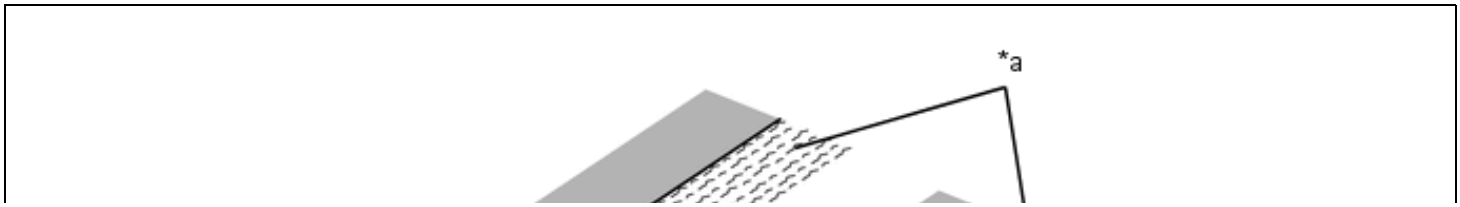

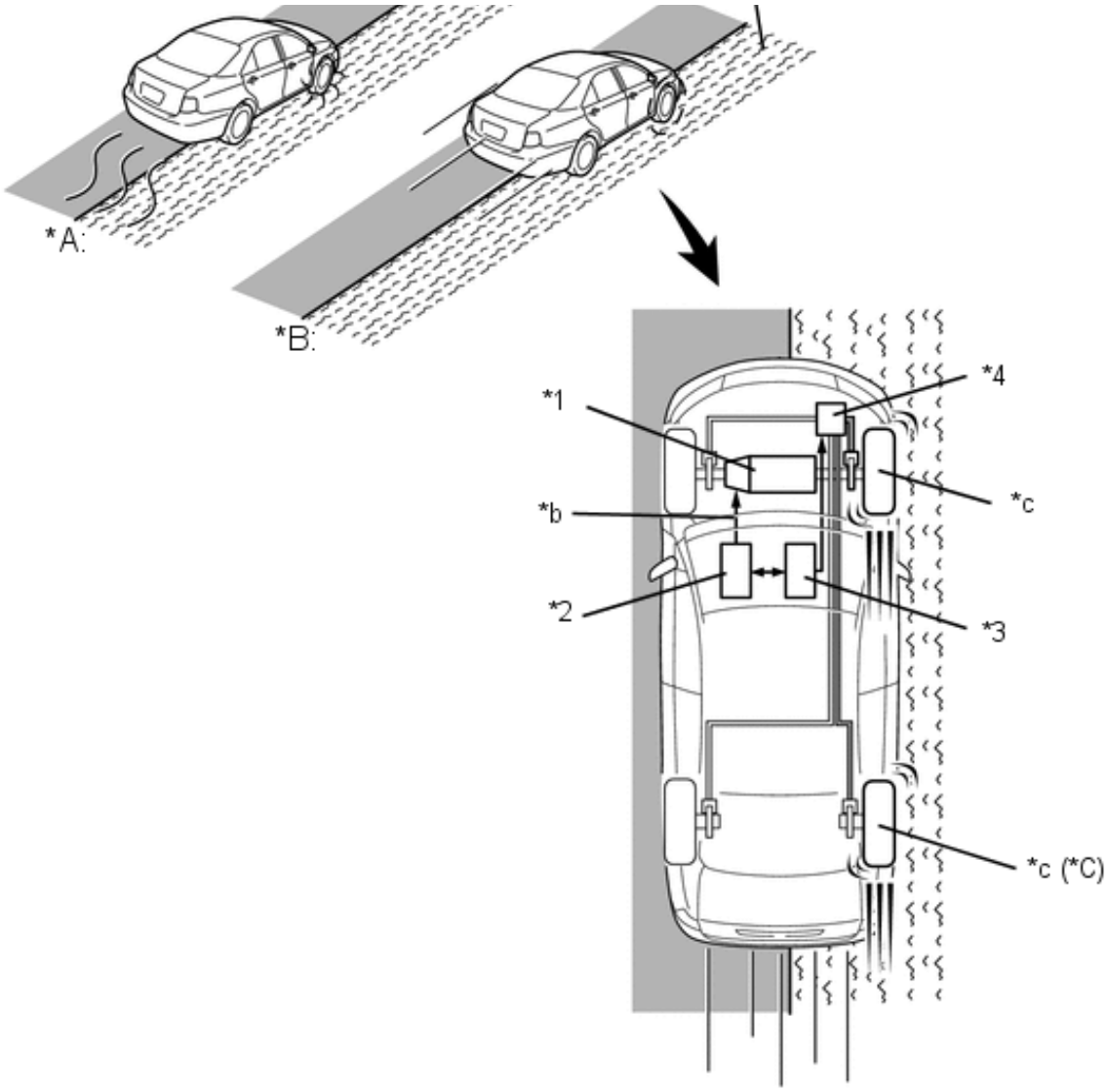


| | | | |
|---|---|---|---|
| *A | Without TRAC | *B | With TRAC |
| *C | AWD Models | - | - |
| *1 | Engine | *2 | ECM |
| *3 | Skid Control ECU | *4 | Brake Actuator |
| *a | Slippery Surface | *b | Engine Output Control |
| *c | Brake Slipping Drive Wheel | - | - |

(f) Vehicle Stability Control (VSC)

(1) The following are 2 examples that can be considered circumstances in which the tires exceed their lateral grip limit. The VSC is designed to help control the vehicle behavior by controlling the engine output and the brakes at each wheel when the vehicle is under one of the conditions indicated below:

| | | | |
|---|---|---|---|
| *a | Front Wheel Skid Tendency | *b | Rear Wheel Skid Tendency |

(2) To determine the condition of the vehicle, sensors detect the steering angle, vehicle speed, vehicle's yaw rate and vehicle's lateral acceleration, which are then calculated by the skid control ECU.

(3) Whether or not the vehicle is experiencing a front wheel skid is determined by the difference between the target yaw rate and the vehicle's actual yaw rate. When the vehicle's actual yaw rate is smaller than the target yaw rate (a target yaw rate is determined based on the vehicle speed and steering angle) that should be generated when the driver operates the steering wheel, it means the vehicle is making a turn at a greater angle than the target locus of travel. Thus, the skid control ECU determines that there is a large front wheel skid tendency.

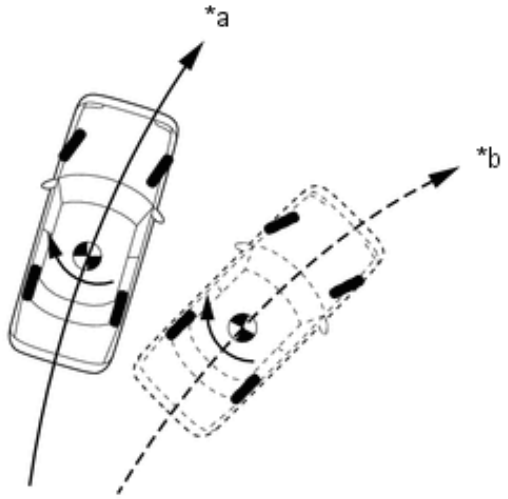


| | | | |
|---|---|---|---|
| *a | Actual Locus of Travel (Actual Yaw Rate) | *b | Locus of Travel Based on Target Yaw Rate |

(4) Whether or not the vehicle is experiencing a rear wheel skid is determined by the values of the vehicle's slip angle and the vehicle's slip angular velocity (time-dependent changes in the vehicle's slip angle). When the vehicle's slip angle is large and the slip angular velocity is also large, the skid control ECU determines that the vehicle has a large rear wheel skid tendency.

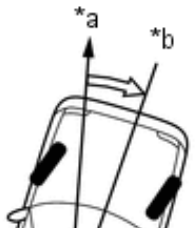

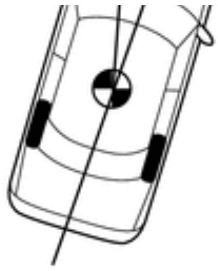

| *a | Direction of Travel of Vehicle's Center of Gravity | *b | Movement of Vehicle |
|---|---|---|---|
| ⇨ | Slip Angle | - | - |

(5) When the skid control ECU determines that the vehicle exhibits a tendency to experience a front wheel skid or a rear wheel skid, it decreases the engine output and applies the brakes of the front or rear wheels to control the vehicle's yaw moment. The basic operation of the VSC is described below. However, the control method differs depending on the vehicle's characteristics and driving conditions.

(6) When the skid control ECU determines that there is a large front wheel skid tendency, it takes countermeasures in accordance with the extent of that tendency. The skid control ECU controls the engine output and applies the brakes of the front wheels and the rear wheel on the inner circle of the turn in order to help restrain the front wheel skid tendency.

## Front Wheel Skid Tendency

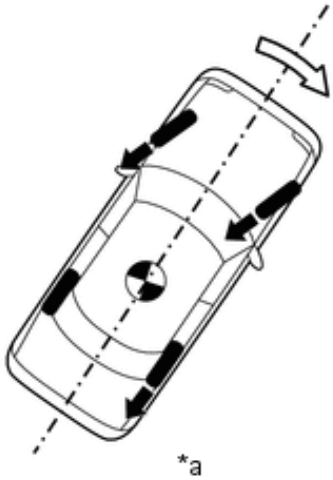


| *a | Making a Right Turn | - | - |
|---|---|---|---|
| ➡ | Brake Force | ⇨ | Control Moment |

(7) When the skid control ECU determines that there is a large rear wheel skid tendency, it takes countermeasures in accordance with the extent of that tendency. The skid control ECU applies the brakes

of the wheels on the outer circle of the turn and generates an outward moment of inertia in the vehicle in order to restrain the rear wheel skid tendency. Along with the reduction in the vehicle speed caused by the braking force, excellent vehicle stability is ensured.

## Rear Wheel Skid Tendency

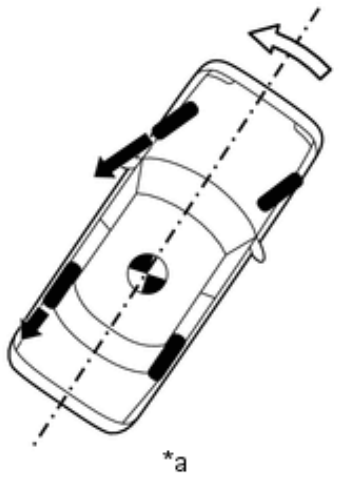


| | | | |
|---|---|---|---|
| *a | Making a Right Turn | - | - |
| ➡ | Brake Force | ⇨ | Control Moment |

(g) Cooperative Control with EPS

(1) Braking when Surface Resistance Differs between Both Sides of Wheels

- If the driver suddenly applies the brakes on a road surface with a considerable difference in friction coefficient between the right and left wheels, the difference in the brake force between the right and left wheels will cause the vehicle posture to become unstable and create a yaw moment. In this state, the skid control ECU controls the VSC to stabilize the vehicle posture. At the same time, the skid control ECU performs cooperative control with the EPS to provide steering torque assist, which facilitates the driver's steering maneuvers to stabilize the vehicle posture.

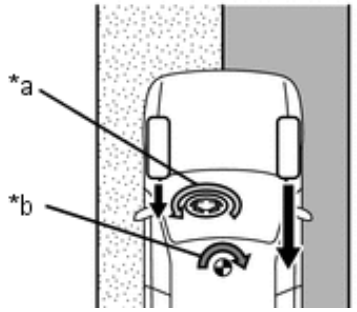

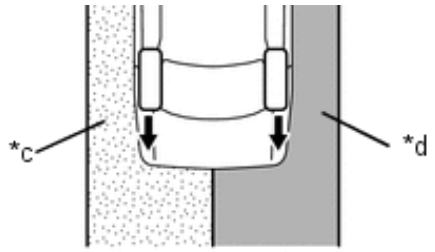


| | | | |
|---|---|---|---|
| *a | Assist Direction | *b | Yaw Moment during Brake Control |
| *c | Low μ Road | *d | High μ Road |
| ➡ | Brake Force | - | - |

(2) Accelerating when Surface Resistance Differs between Both Sides of Wheels

- If the driver suddenly starts off or accelerates on a road surface with a considerable difference in friction coefficient between the right and left wheels, the slippage of a drive wheel will cause the vehicle posture to become unstable and negatively affect its acceleration performance. In this state, the skid control ECU causes the TRAC to control the hydraulic brake of the slipping drive wheel, and requests the ECM to effect engine output control. At the same time, the skid control ECU performs cooperative control with the EPS to provide steering torque assist, which facilitates the driver's steering maneuvers to stabilize the vehicle posture.

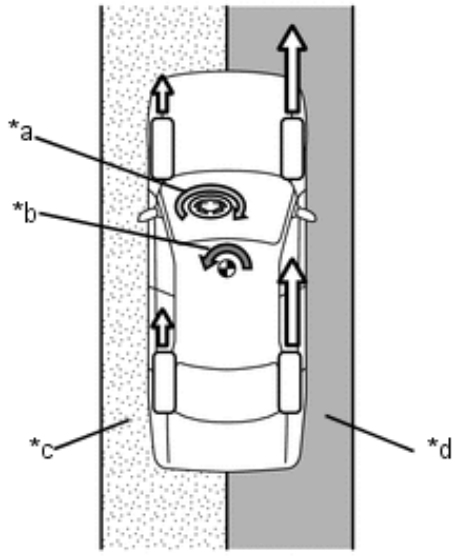


| | | | |
|---|---|---|---|
| *a | Assist Direction | *b | Yaw Moment during Acceleration |
| *c | Low μ Road | *d | High μ Road |
| ⇨ | Drive Force | - | - |

(3) Front Wheel Skid Tendency

- When the skid control ECU determines a front wheel skid tendency, it controls the VSC to dampen the front wheel skid. At the same time, the skid control ECU performs the cooperative control with the EPS to provide steering torque assists, which controls the driver's steering

maneuvers to stabilize the vehicle posture. Steering torque assists are provided to inform the driver of the front wheel skid (a), and to prevent the driver's excessive turning of the steering wheel (b). In the assist for preventing excessive turning (b), the skid control ECU increases the resistance to counter the driver's steering effort, if the driver turns the steering wheel excessively.

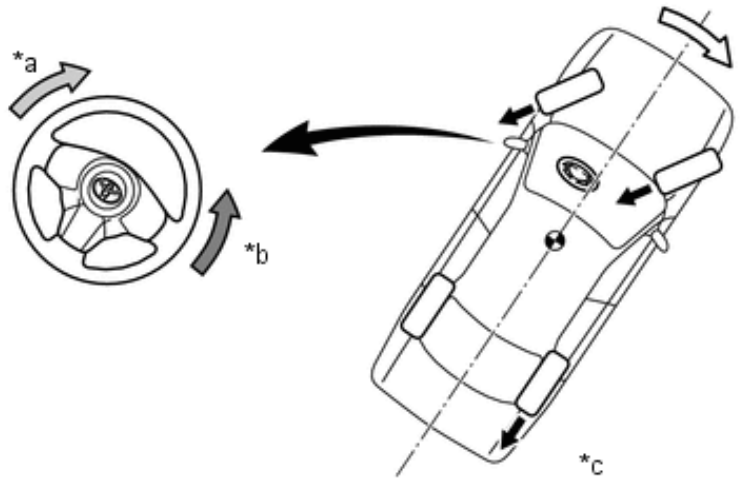


| | | | |
|---|---|---|---|
| *a | (a) Assist Direction for Informing Driver of Front Wheel Skid | *b | (b) Assist Direction for Preventing Excessive Turning |
| *c | Making a Right Turn | - | - |
| ➡ | Brake Force | ⇨ | Control Moment |

(4) Rear Wheel Skid Tendency

- When the skid control ECU determines a rear wheel skid tendency, it controls the VSC to dampen the rear wheel skid. At the same time, the skid control ECU performs cooperative control with the EPS to provide steering torque assist, which facilitates the driver's steering maneuvers in the direction to correct the rear wheel skid.

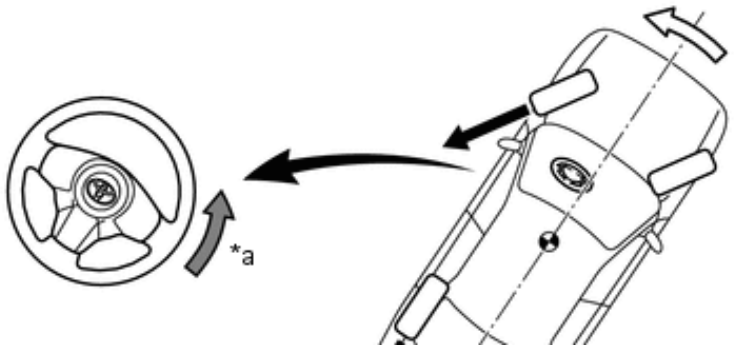

| *a | Assist Direction | *b | Making a Right Turn |
|---|---|---|---|
| ➡ | Brake Force | ⇨ | Control Moment |

(h) Cooperative Control with AWD System

(1) Acceleration During Cornering

- A sudden acceleration of the vehicle during cornering may cause a drive wheel to freewheel, which could cause the front wheels or rear wheels to skid. If the skid control ECU determines the freewheeling of a drive wheel, a front wheel skid tendency or a rear wheel skid tendency, it performs cooperative control with the AWD system to optimally control the drive torque distribution to the front and rear wheels. Furthermore, the skid control ECU controls the TRAC and the VSC as needed to ensure driving stability and acceleration performance.

## Front Wheel Skid Tendency

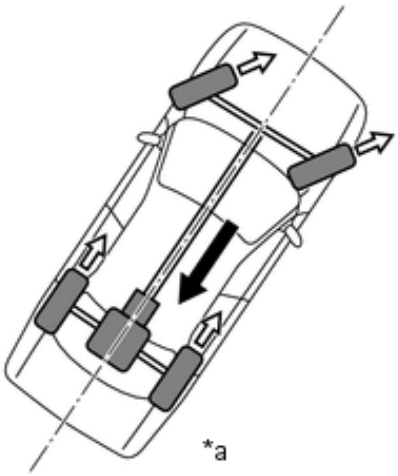


| *a | Making a Right Turn | - | - |
|---|---|---|---|
| ➡ | Drive Torque Distribution to Rear Wheel | ⇨ | Drive Force |

## Rear Wheel Skid Tendency

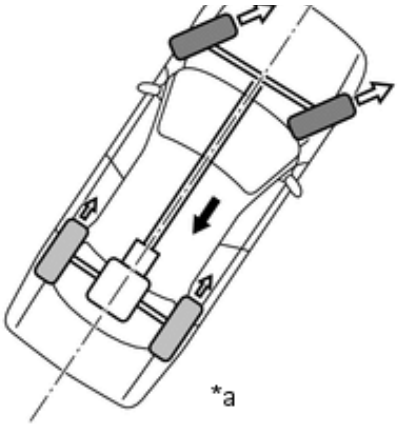


| | | | |
|---|---|---|---|
| *a | Making a Right Turn | - | - |
| ➡ | Drive Torque Distribution to Rear Wheel | ⇨ | Drive Force |

**3. FAIL-SAFE**

(a) If a failure occurs in the skid control ECU, sensors or brake actuator assembly, the system continues effecting brake control by excluding the failed area and using only the areas that are operating normally.

**4. DIAGNOSIS**

(a) If the skid control ECU detects a malfunction in the brake control system, the warning lights or indicator light illuminate. At the same time, a Diagnostic Trouble Code (DTC) is stored in the memory of the skid control ECU.

(b) This system has a sensor signal check (test mode) function.

(c) For details of DTCs and check function, refer to the Repair Manual.