| | | |
|---|---|---|
| **Last Modified:** 03-12-2013 | 6.4 F | **Doc ID:** NM1000000005G0L |
| **Model Year:** 2013 | **Model:** RAV4 | **Prod Date Range:** [12/2012 - ] |
| **Title:** SLIDING ROOF / CONVERTIBLE: SLIDING ROOF SYSTEM: PARTS LOCATION; 2013 MY RAV4 [12/2012 - ] | | |

# PARTS LOCATION

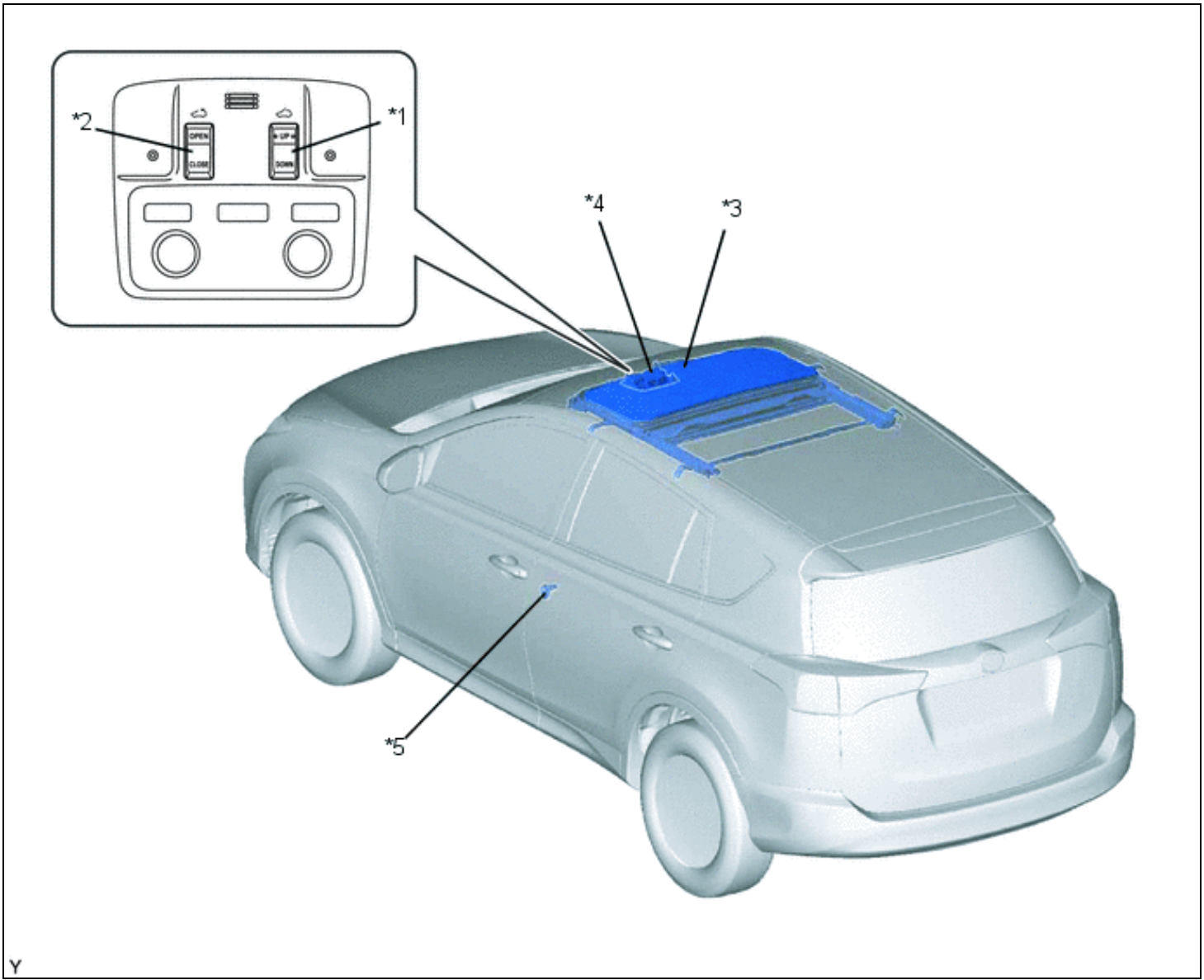


| | | | |
|---|---|---|---|
| *1 | Tilt Up/Down Switch | *2 | Open/Close Switch |
| *3 | Sliding Roof Drive Gear Sub-assembly | *4 | Map Light Assembly |
| *5 | Front Door Courtesy Light Switch LH | - | - |

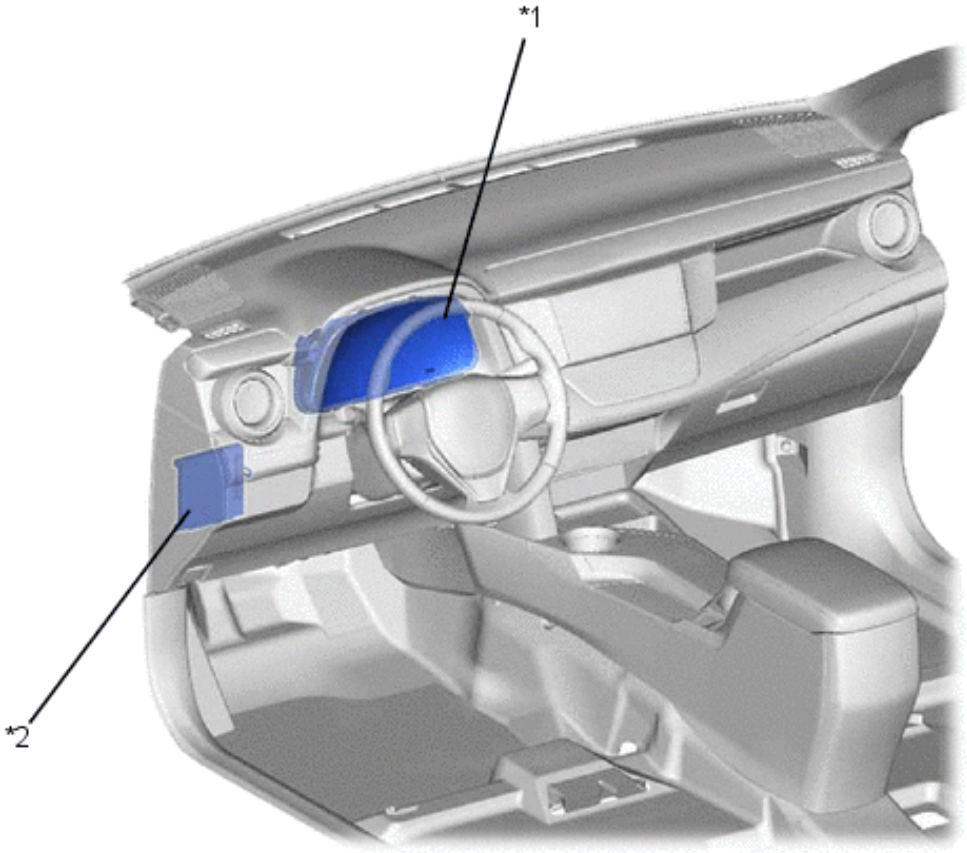


Y

| | | | |
|---|---|---|---|
| *1 | Combination Meter Assembly<br>- Buzzer | *2 | Main Body ECU (Multiplex Network Body ECU) |