| | | |
|---|---|---|
| **Last Modified:** 03-12-2013 | 6.4 F | **Doc ID:** NM1000000005PU4 |
| **Model Year:** 2013 | **Model:** RAV4 | **Prod Date Range:** [12/2012 - ] |
| **Title:** REAR SUSPENSION: REAR SUSPENSION SYSTEM: SHOCK ABSORBER; 2013 MY RAV4 [12/2012 - ] | | |

# SHOCK ABSORBER

## 1. CONSTRUCTION

(a) A low-pressure ($N_2$) gas sealed rear shock absorber assembly is used to achieve both driving stability and ride comfort.

(b) Internal friction has been reduced, thus allowing the absorber rod to move smoothly.

(c) The spring characteristics of the absorber bush have been optimized, thus achieving a high-quality ride comfort.

**HINT:**

To prevent hazardous conditions, make sure to empty the gas from the rear shock absorber assembly before discarding the low-pressure ($N_2$) gas sealed in the rear shock absorber assembly. For details, refer to the Repair Manual.

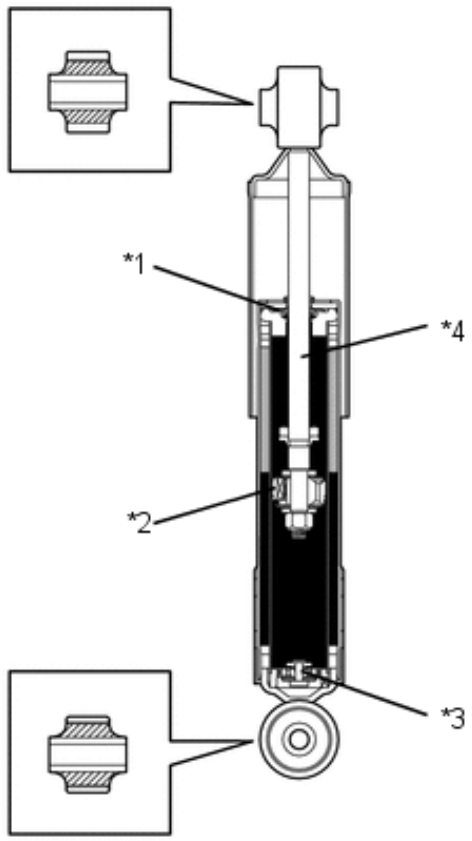


Y

| | | | |
|---|---|---|---|
| *1 | Oil Seal | *2 | Piston Valve |
| *3 | Base Valve | *4 | Absorber Rod |
| | | | |

| | | | |
|---|---|---|---|
| | Oil | | Low-pressure ($N_2$) Gas |