| | | |
|---|---|---|
| **Last Modified:** 03-12-2013 | 6.4 F | **Doc ID:** NM1000000005PV2 |
| **Model Year:** 2013 | **Model:** RAV4 | **Prod Date Range:** [12/2012 - ] |
| **Title:** POWER ASSIST SYSTEMS: POWER STEERING SYSTEM: PARTS LOCATION; 2013 MY RAV4 [12/2012 - ] | | |

# PARTS LOCATION

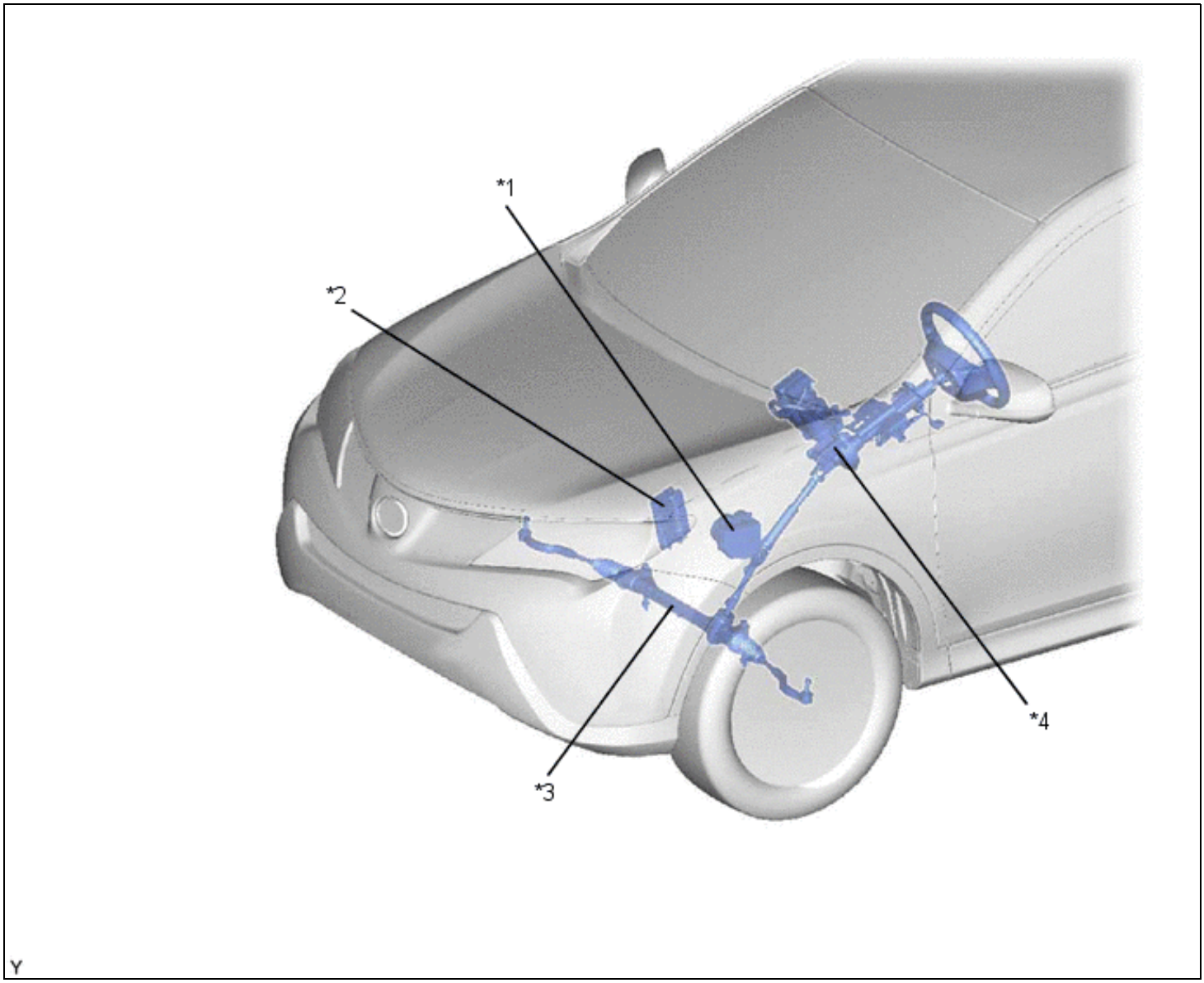


| | | | |
|---|---|---|---|
| *1 | Brake Actuator Assembly<br>• Skid Control ECU | *2 | ECM |
| *3 | Steering Gear Assembly | *4 | Steering Column Assembly<br>• Power Steering Motor<br>• Power Steering ECU Assembly<br>• Rotation Angle Sensor<br>• Reduction Mechanism<br>• Power Steering Torque Sensor |

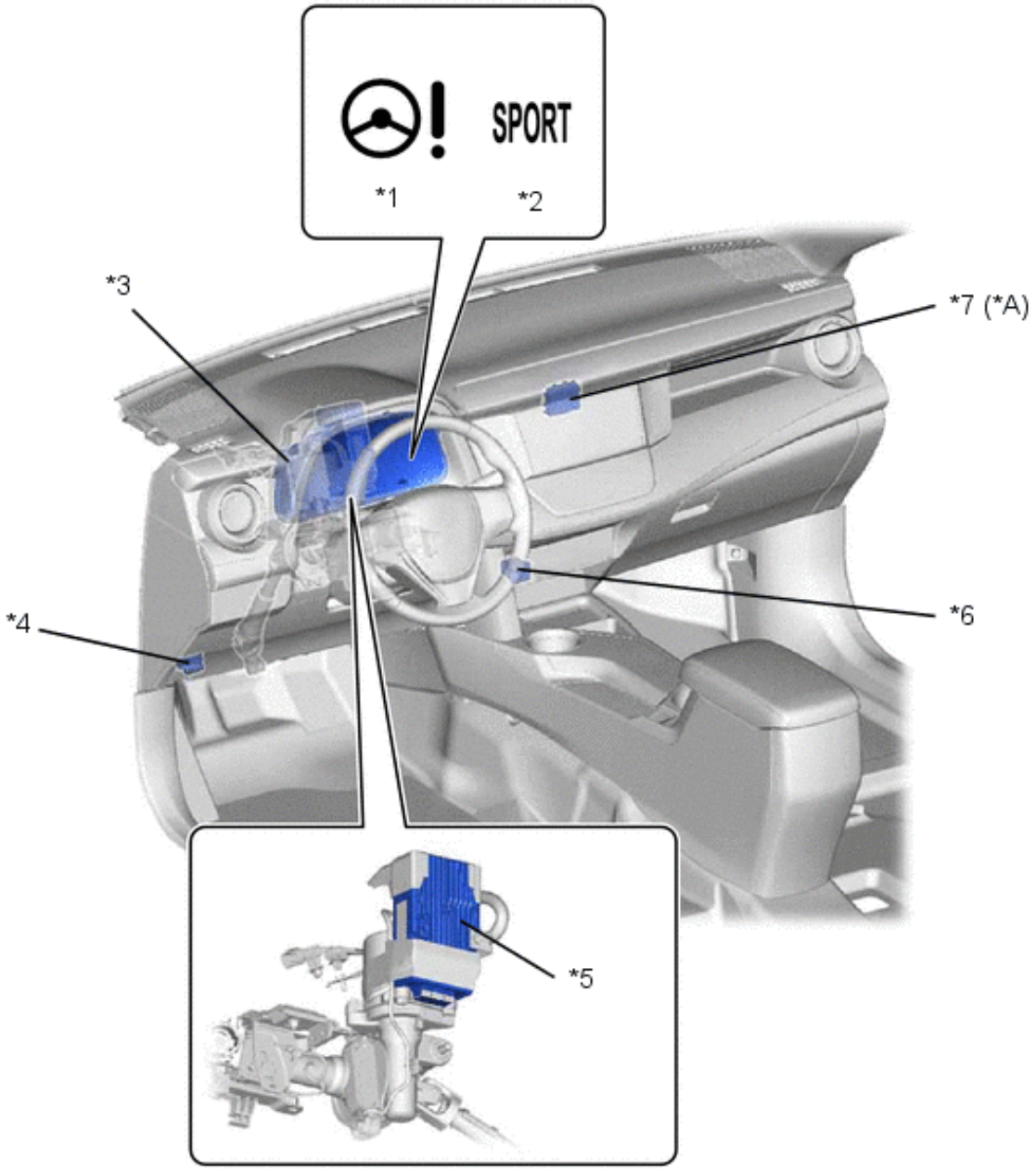


Y

| | | | |
|---|---|---|---|
| *A | AWD Models | - | - |
| *1 | Power Steering Warning Light | *2 | Sport Mode Indicator Light |
| *3 | Combination Meter Assembly<br>• Buzzer | *4 | DLC3 |
| *5 | Power Steering ECU Assembly | *6 | Sport Mode Switch |
| *7 | 4WD ECU Assembly | - | - |