| | | |
|---|---|---|
| **Last Modified:** 03-12-2013 | 6.4 F | **Doc ID:** NM1000000005II3 |
| **Model Year:** 2013 | **Model:** RAV4 | **Prod Date Range:** [12/2012 - ] |
| **Title:** HEATING / AIR CONDITIONING: AIR CONDITIONING SYSTEM: AIR CONDITIONING CONTROL; 2013 MY RAV4 [12/2012 - ] | | |

# AIR CONDITIONING CONTROL

## 1. SYSTEM CONTROL

(a) The air conditioning system uses the following controls:

| CONTROL | OUTLINE |
|---|---|
| Neural Network Control* | This control is capable of effecting complex control by artificially simulating the information processing method of the nervous system of living organisms in order to establish a complex input/output relationship that is similar to that of a human brain. |
| Micro Dust and Pollen Filter Mode Control* | Activated by the micro dust and pollen filter mode switch operation. Switches the air outlet to the FACE mode. Sends air which has passed through the clean air filter to the area around the upper part of the bodies of the driver and front passenger. This air is filtered by the clean air filter in order to remove pollen. |
| Outlet Air Temperature Control* | Based on the temperature set at the temperature control switch, the neural network control calculates the outlet air temperature based on the input signals from various sensors. |
| | The temperature settings for the driver and front passenger are controlled independently in order to provide a separate vehicle interior temperature for the right and left sides of the vehicle. As a result, air conditioning control that accommodates occupant preferences has been achieved. |
| Blower Control* | Controls the blower motor in accordance with the airflow volume that has been calculated by the neural network control based on the input signals from various sensors. |
| Air Outlet Control* | Automatically switches the air outlets in accordance with the outlet mode that has been calculated by the neural network control based on the input signals from various sensors. |
| Cooler Compressor Control | Controls the blower motor in accordance with the airflow volume that has been calculated by the neural network control based on the input signals from various sensors. |
| Rear Window Defogger Control | Switches the rear window defogger on for 15 minutes when the rear window defogger switch is pressed. |
| | Switches the rear window defogger off if the switch is pressed while it is operating. |

*: Models with automatic air conditioning system

(b) Neural Network Control

(1) In the previous automatic air conditioning system, the air conditioning amplifier assembly determined the required outlet air temperature and blower air volume in accordance with a calculation formula that had been obtained based on information received from the sensors. However, because the sensors of a person are rather complex, a given temperature is sensed differently, depending on the environment in which the person is situated. For example, a given amount of solar radiation can feel comfortably warm in a cold climate, but extremely uncomfortable in a hot climate. Therefore, as a technique for effecting a high level of control, a neural network is used in the automatic air conditioning system. With this technique, the data that has been collected under varying environmental conditions is stored in the air conditioning amplifier assembly, which effects control to provide enhanced air conditioning comfort.

(2) The neural network control consists of neurons in an input layer an intermediate layer, and an output layer. The input layer neurons process the input data of the ambient temperature, the amount of sunlight and the room temperature based on the outputs of the switches and sensors, and output them to the intermediate layer neurons. Based on this data, the intermediate layer neurons adjust the strength of the links among the neurons. The sum of this data is then calculated by the output layer neurons in the form of the required outlet temperature, solar correction, target airflow volume and outlet mode control volume. Accordingly, the air conditioning amplifier assembly controls the servo motors and blower with fan motor sub-assembly in accordance with the control volumes that have been calculated by the neural network control.

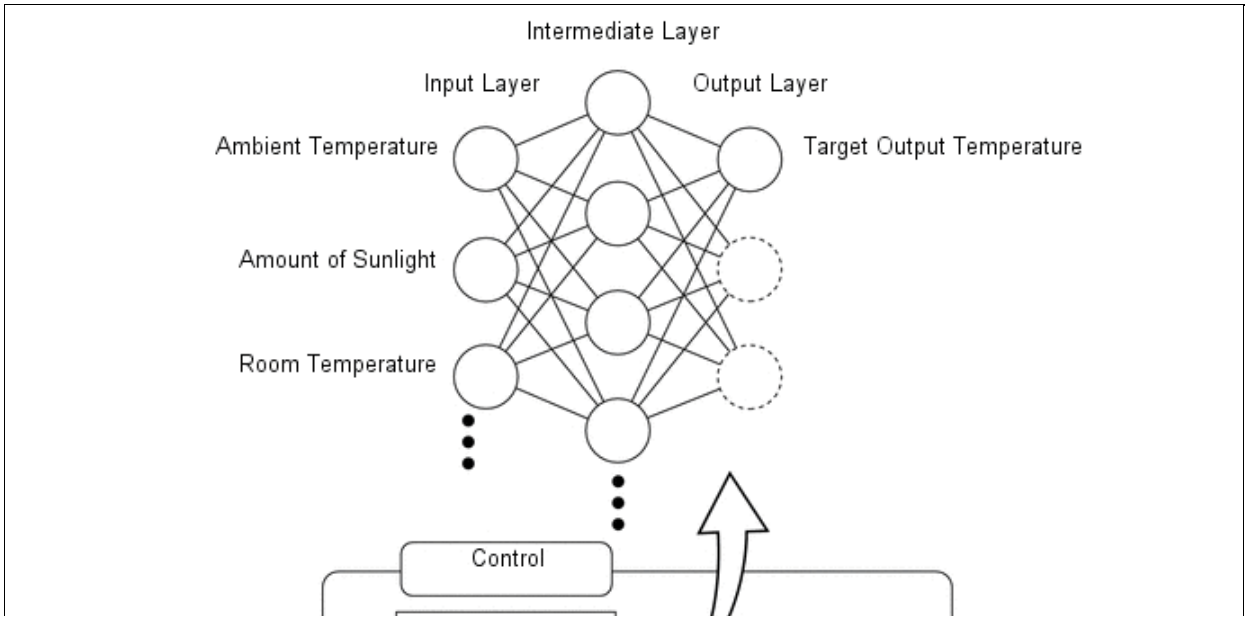
Intermediate Layer
Input Layer
Output Layer
Ambient Temperature
Target Output Temperature
Amount of Sunlight
Room Temperature
Control

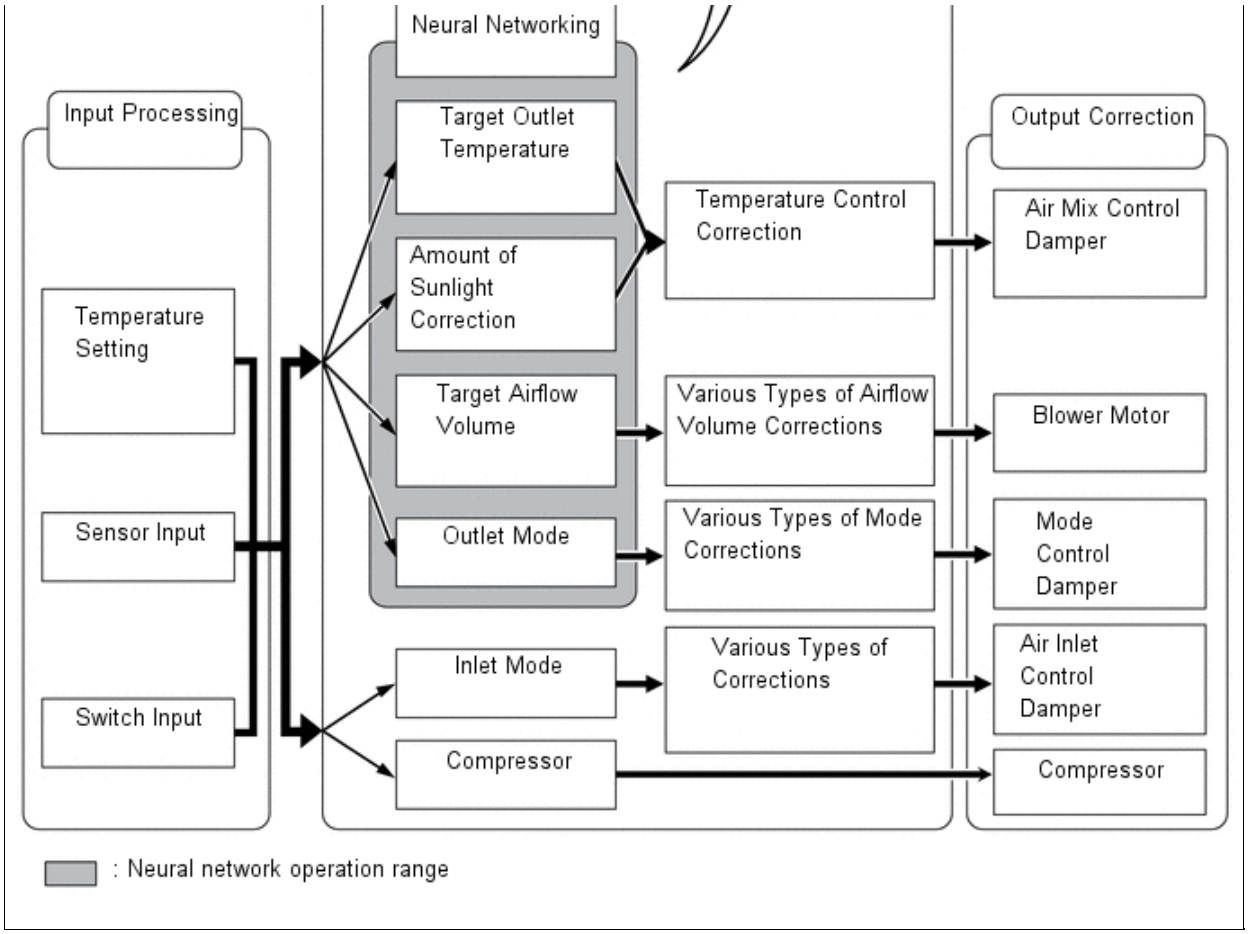


(c) Quick Heater Control

(1) The on/off function of the quick heater assembly is controlled by the air conditioning amplifier assembly in accordance with the engine coolant temperature, engine speed, air mix setting and electrical load (alternator power ratio).

(2) For example, the heating value of the operating quick heater assembly varies depending on the engine coolant temperature, as in the graph below:

**Heating Value of Operating Quick Heater Assembly**

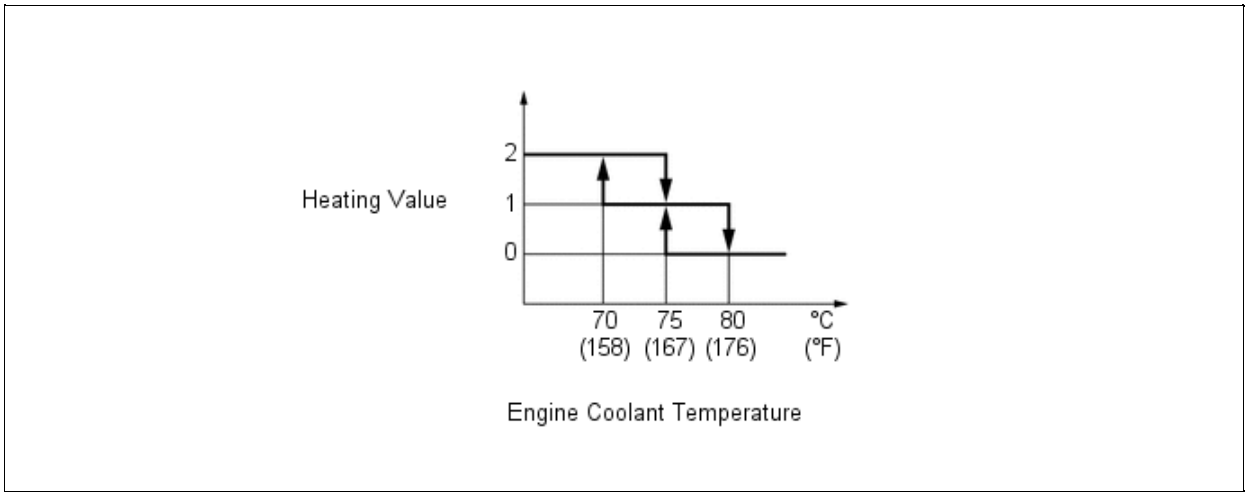


(d) Micro Dust and Pollen Filter Mode Control

(1) When the micro dust and pollen filter mode switch is pressed, the micro dust and pollen filter mode control is activated. Then, the air outlet is switched to the FACE mode and recirculated pollen-free air flows in the area around the upper part of the bodies of the driver and front passenger.

- When the micro dust and pollen filter mode switch signal is input to the air conditioning amplifier assembly, the air

When the micro dust and pollen filter mode switch signal is input to the air conditioning amplifier assembly, the air conditioning amplifier assembly controls the compressor with pulley assembly, No. 1 damper servo sub-assembly, No. 3 air conditioning radiator damper servo sub-assembly and blower with fan motor sub-assembly as shown in the timing chart below.

- This control usually operates for approximately 3 minutes. However, when the ambient temperature is low [5 °C (41 °F) maximum], it will operate for approximately 1 minute.
- After this control stops operating, the air conditioning amplifier assembly automatically returns to the mode it was in just before the pollen removal mode switch was pressed.

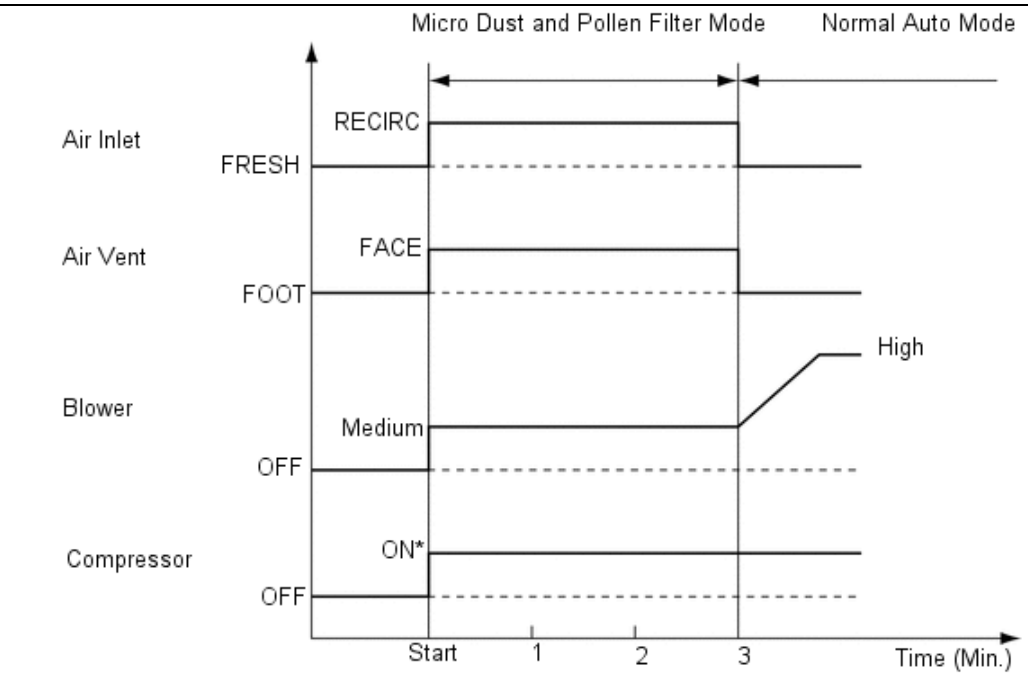


*: The compressor with pulley assembly on only when the outside temperature is low. The compressor with pulley assembly remains on after the micro dust and pollen filter mode has been canceled.