| | | |
|---|---|---|
| **Last Modified:** 03-12-2013 | 6.4 F | **Doc ID:** NM1000000005PUJ |
| **Model Year:** 2013 | **Model:** RAV4 | **Prod Date Range:** [12/2012 - ] |
| **Title:** BRAKE CONTROL / DYNAMIC CONTROL SYSTEMS: BRAKE CONTROL SYSTEM: BRAKE ACTUATOR; 2013 MY RAV4 [12/2012 - ] | | |

# BRAKE ACTUATOR

## 1. CONSTRUCTION

(a) The brake actuator assembly consists of an actuator portion, a skid control ECU, a solenoid relay, a pump motor and a master cylinder pressure sensor.

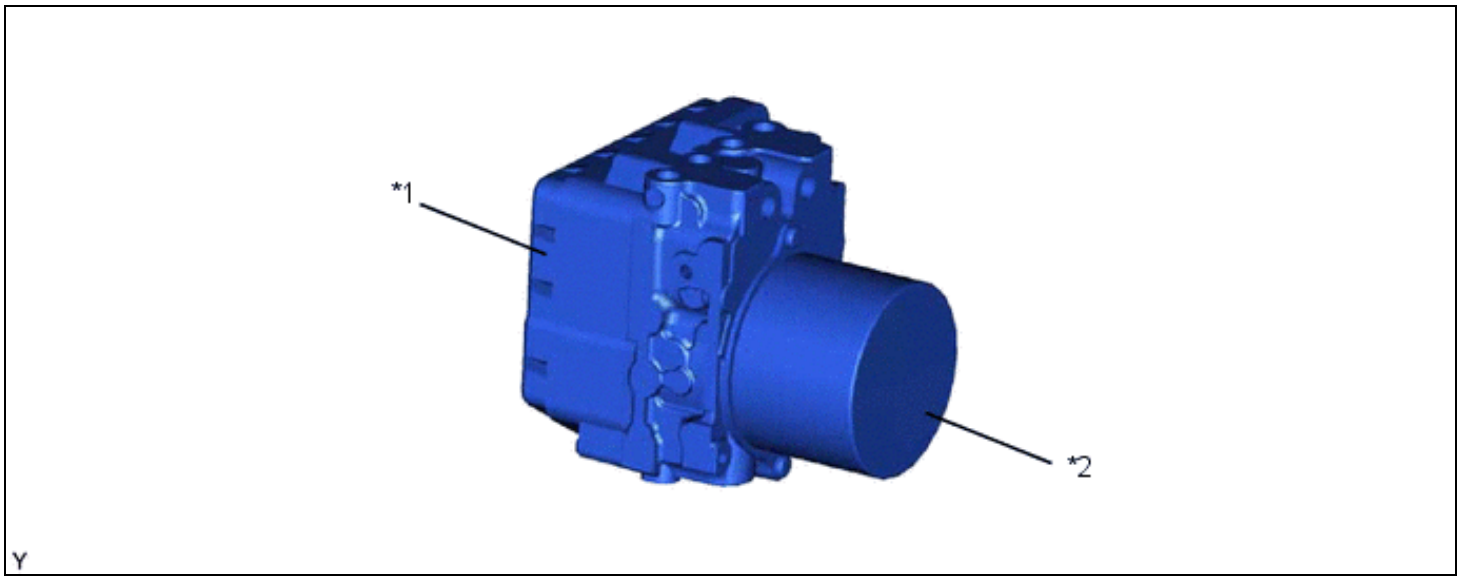


| | | | |
|---|---|---|---|
| *1 | Skid Control ECU | *2 | Actuator Portion |

(b) The actuator portion consists of 2 master cylinder cut solenoid valves, 4 pressure holding solenoid valves, 4 pressure reduction solenoid valves, 2 pumps, 2 reservoirs and a master cylinder pressure sensor.

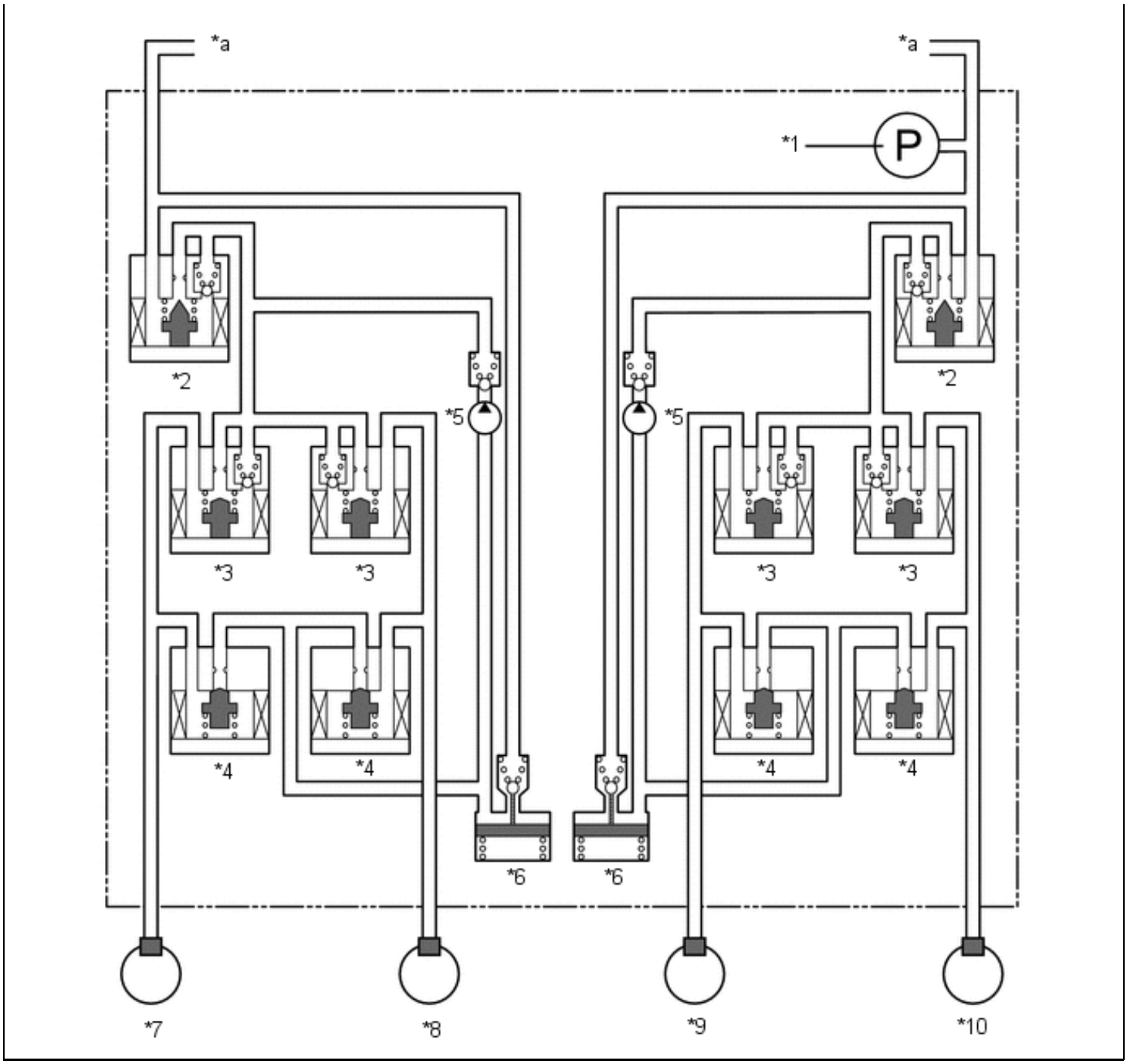


| | | | |
|---|---|---|---|
| *1 | Master Cylinder Pressure Sensor | *2 | Master Cylinder Cut Solenoid Valve |
| *3 | Pressure Holding Solenoid Valve | *4 | Pressure Reduction Solenoid Valve |
| *5 | Pump | *6 | Reservoir |
| *7 | Front Left Wheel Cylinder | *8 | Rear Right Wheel Cylinder |
| *9 | Rear Left Wheel Cylinder | *10 | Front Right Wheel Cylinder |
| *a | From Master Cylinder | - | - |

## 2. OPERATION

(a) ABS and EBD

(1) Based on the signals received from the 4 speed sensors, the skid control ECU calculates the speed of each wheel and checks the wheel slipping conditions. In accordance with the slipping condition, the skid control ECU controls each solenoid valve in the brake actuator assembly in order to adjust the fluid pressure of each wheel cylinder in the following 3 modes: pressure increase, pressure holding and pressure reduction

each wheel cylinder in the following 3 modes: pressure increase, pressure holding and pressure reduction modes.

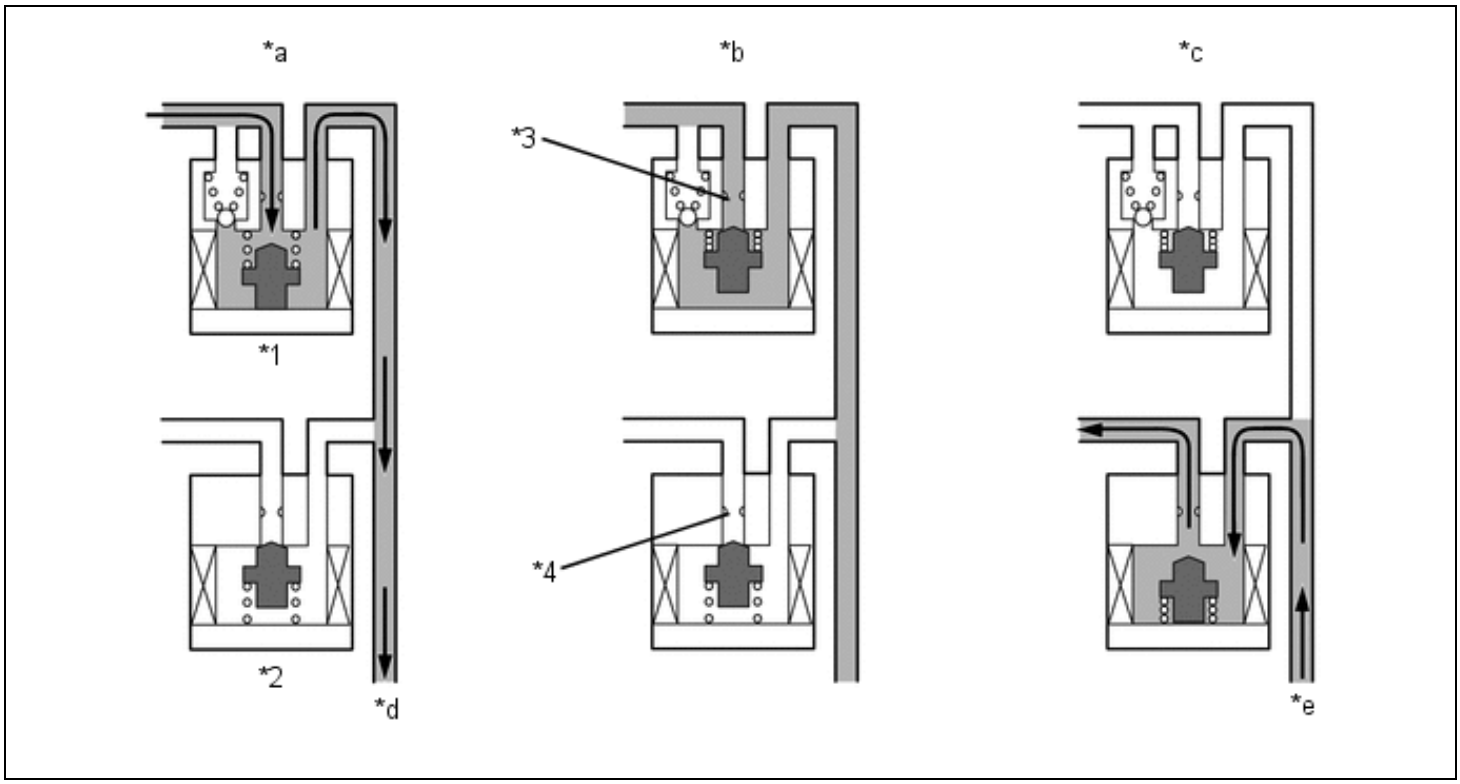


| | | | |
|---|---|---|---|
| *1 | Pressure Holding Solenoid Valve | *2 | Pressure Reduction Solenoid Valve |
| *3 | Port A | *4 | Port B |
| *a | Pressure Increase Mode | *b | Pressure Holding Mode |
| *c | Pressure Reduction Mode | *d | To Wheel Cylinder |
| *e | From Wheel Cylinder | - | - |

**Brake Actuator Operation in ABS and EBD**

| PRESSURE MODE | INCREASE MODE | HOLDING MODE | REDUCTION MODE |
|---|---|---|---|
| Pressure Holding Solenoid Valve (Port A) | Off (Open) | On (Closed) | ← |
| Pressure Reduction Solenoid Valve (Port B) | Off (Closed) | ← | On (Open) |
| Wheel Cylinder Pressure | Increases | Holds | Reduces |

(b) Brake Assist

(1) In the event of emergency braking, the skid control ECU determines the driver's intention based on the speed of the pressure increase in the master cylinder determined by the master cylinder pressure sensor signal. If the skid control ECU judges the need for additional brake assist, pressure is generated by the pump in the brake actuator assembly and directed to the wheel cylinder to apply a large amount of fluid pressure.

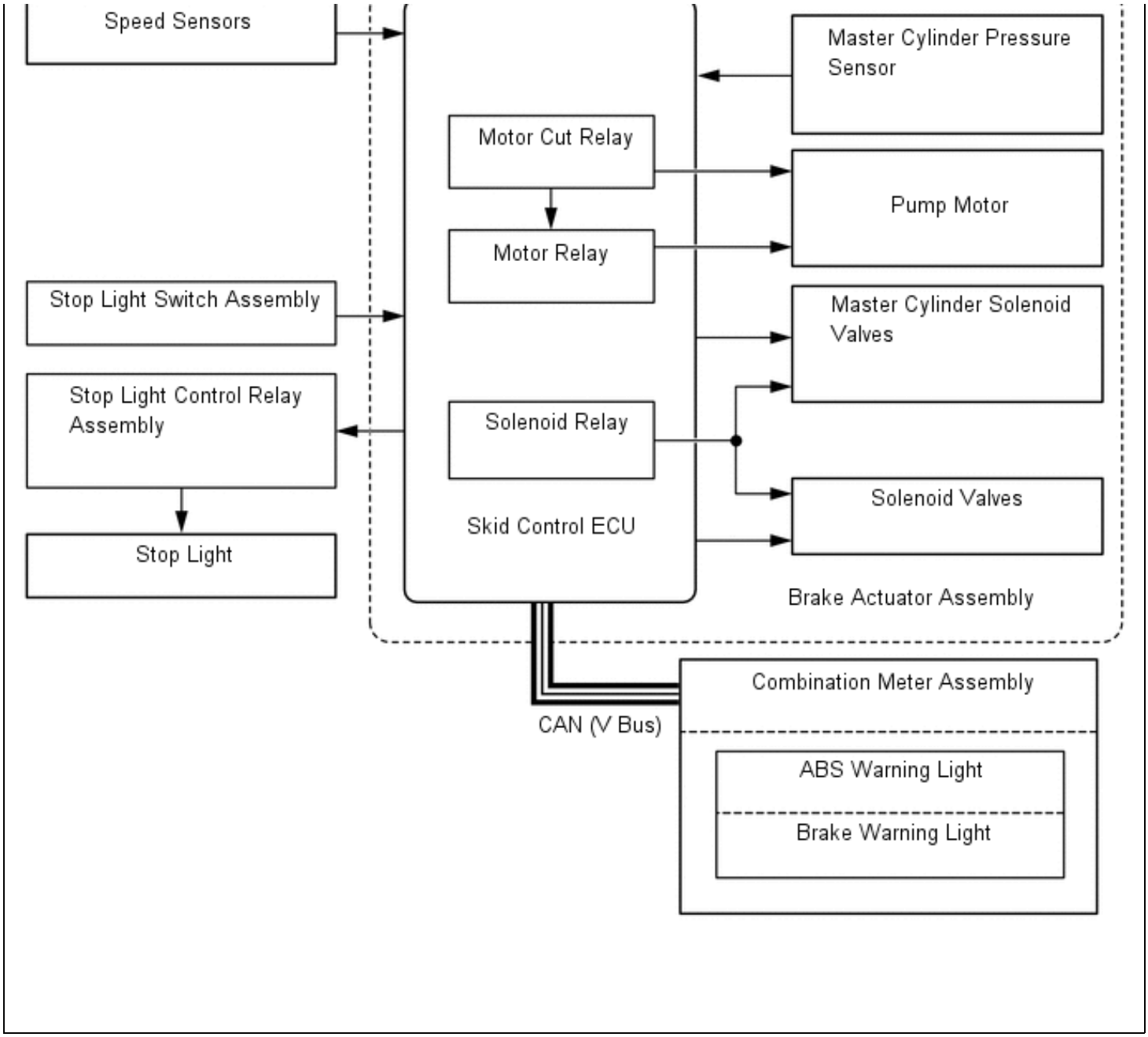
Speed Sensors
Master Cylinder Pressure Sensor
Motor Cut Relay
Pump Motor
Motor Relay
Stop Light Switch Assembly
Master Cylinder Solenoid Valves
Stop Light Control Relay Assembly
Solenoid Relay
Solenoid Valves
Skid Control ECU
Stop Light
Brake Actuator Assembly
Combination Meter Assembly
CAN (V Bus)
ABS Warning Light
Brake Warning Light

*a
*a

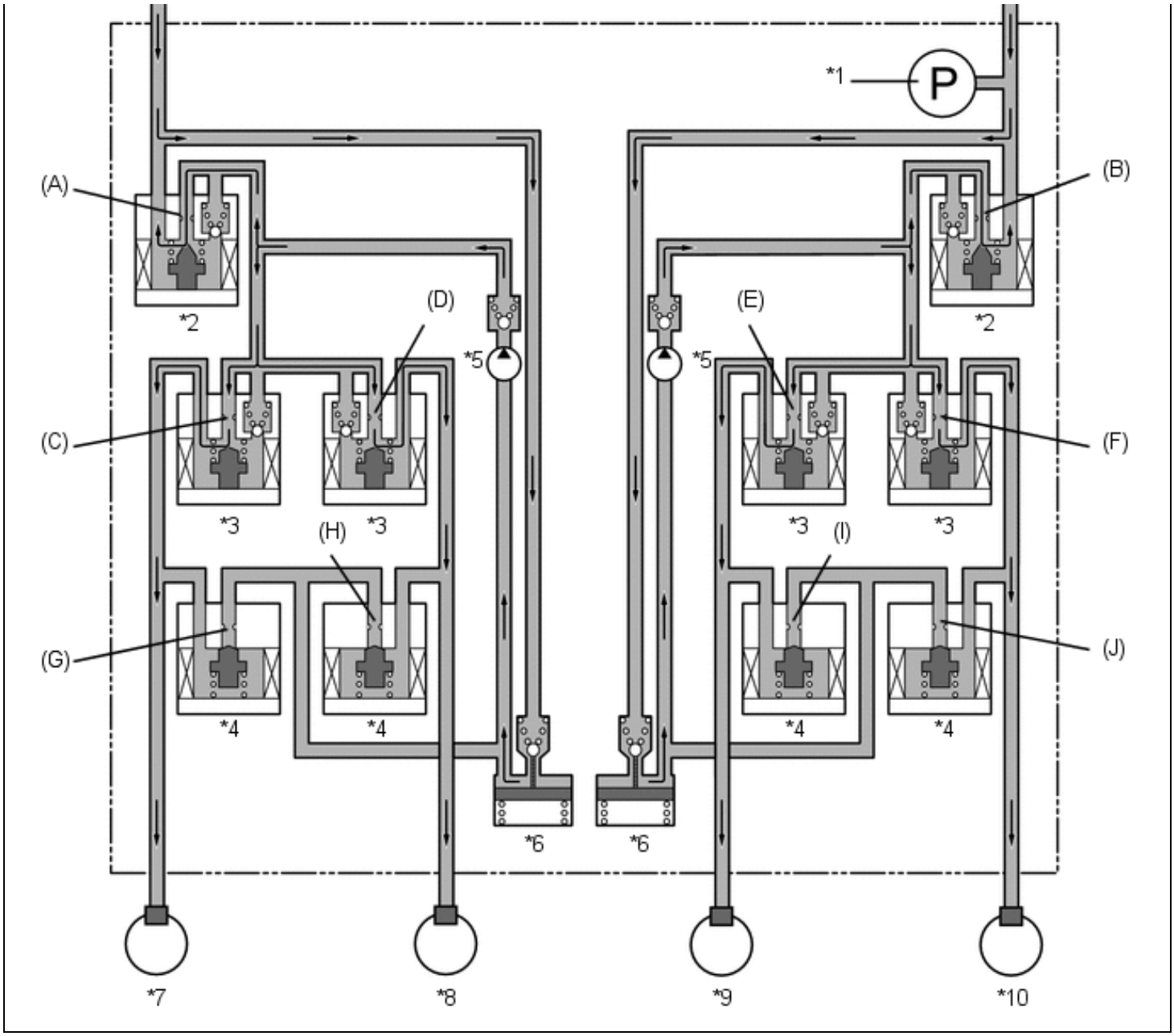


| | | | |
|---|---|---|---|
| *1 | Master Cylinder Pressure Sensor | *2 | Master Cylinder Cut Solenoid Valve |
| *3 | Pressure Holding Solenoid Valve | *4 | Pressure Reduction Solenoid Valve |
| *5 | Pump | *6 | Reservoir |
| *7 | Front Left Wheel Cylinder | *8 | Rear Right Wheel Cylinder |
| *9 | Rear Left Wheel Cylinder | *10 | Front Right Wheel Cylinder |
| *a | From Master Cylinder | - | - |

**Brake Actuator Operation in Brake Assist**

| ITEM | | BRAKE ASSIST NOT ACTIVATED | BRAKE ASSIST ACTIVATED |
|---|---|---|---|
| Pump | | Off | On |
| Master Cylinder Cut Solenoid Valve | Port (A) | Off (Open) | On* |
| | Port (B) | Off (Open) | On* |
| | Port (C) | Off (Open) | ← |

| | | | |
|---|---|---|---|
| Pressure Holding Solenoid Valve | Port (D) | Off (Open) | ← |
| | Port (E) | Off (Open) | ← |
| | Port (F) | Off (Open) | ← |
| Pressure Reduction Solenoid Valve | Port (G) | Off (Closed) | ← |
| | Port (H) | Off (Closed) | ← |
| | Port (I) | Off (Closed) | ← |
| | Port (J) | Off (Closed) | ← |

**HINT:**

*: The solenoid valve switches the hydraulic pressure between "open" and "closed" in accordance with the operating conditions by adjusting continually.

(c) Auto LSD

(1) The skid control ECU determines that the vehicle is in a state in which the Auto LSD can operate by using various sensors and switches to detect the operating conditions of the VSC OFF switch, shift position, accelerator pedal and brake pedal.

(2) When the vehicle is in a state in which the Auto LSD can operate, the skid control ECU performs hydraulic pressure control of the wheel cylinder in the wheel with the faster wheel speed, so that the wheel speeds of the right and left drive wheels will become equal.

(3) The Auto LSD indicator light illuminates when the vehicle is in a state in which the Auto LSD can operate, and the slip indicator light flashes during Auto LSD control.

(4) If the Auto LSD function operates due to the slippage of the left drive wheel, see the next page for the operation of the solenoid valves.

**NOTICE:**

Use the Auto LSD only if a wheel comes off or while driving on a road surface with high driving resistance such as sand or mud. Do not use the Auto LSD for normal driving. After using the Auto LSD, make sure the Auto LSD indicator light is off before resuming driving. To operate the VSC OFF switch, make sure the wheels are not spinning.

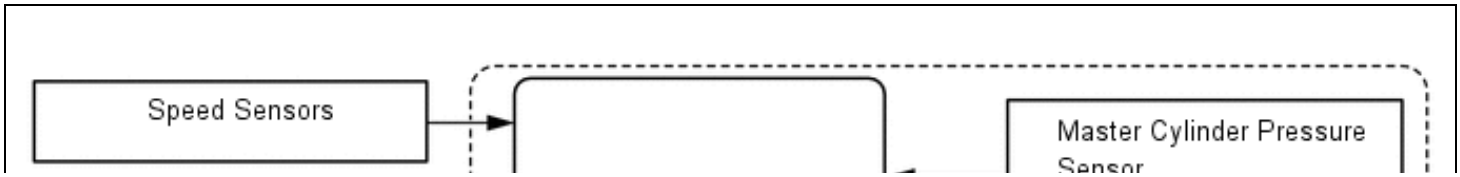

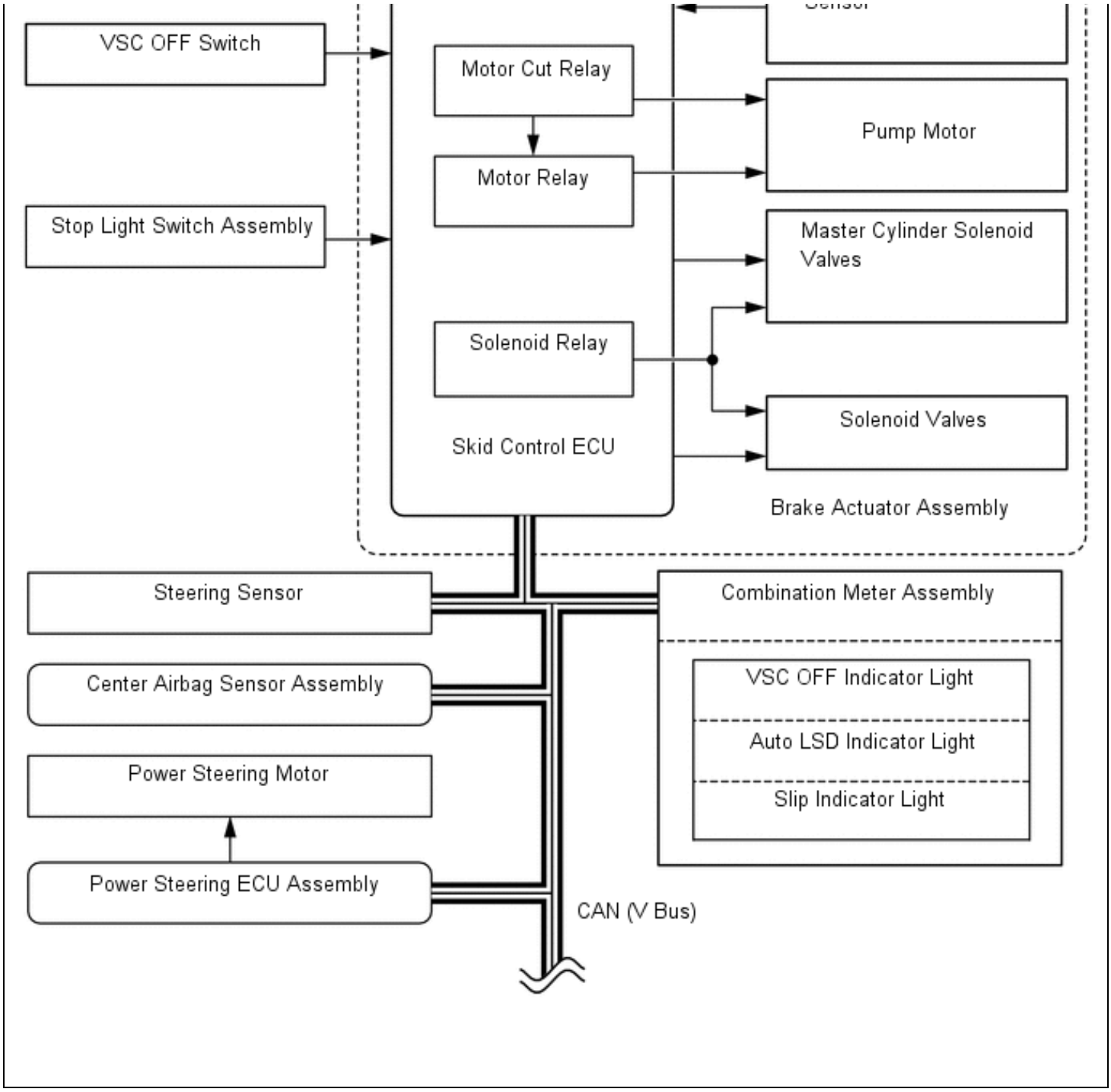
VSC OFF Switch
Motor Cut Relay
Pump Motor
Motor Relay
Stop Light Switch Assembly
Master Cylinder Solenoid Valves
Solenoid Relay
Solenoid Valves
Skid Control ECU
Brake Actuator Assembly
Steering Sensor
Combination Meter Assembly
Center Airbag Sensor Assembly
VSC OFF Indicator Light
Auto LSD Indicator Light
Power Steering Motor
Slip Indicator Light
Power Steering ECU Assembly
CAN (V Bus)

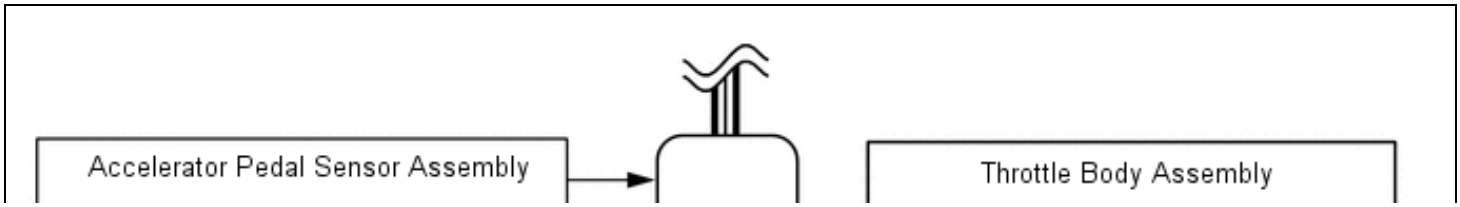
Accelerator Pedal Sensor Assembly
Throttle Body Assembly

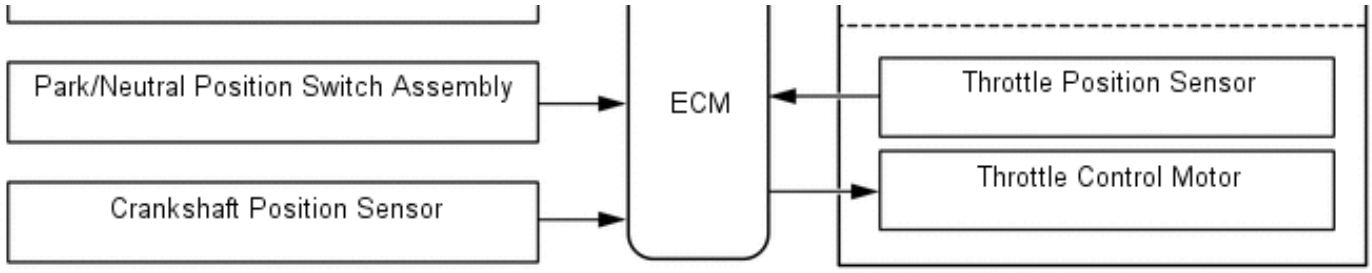
Park/Neutral Position Switch Assembly
Crankshaft Position Sensor
ECM
Throttle Position Sensor
Throttle Control Motor

*a
*a
*1
P

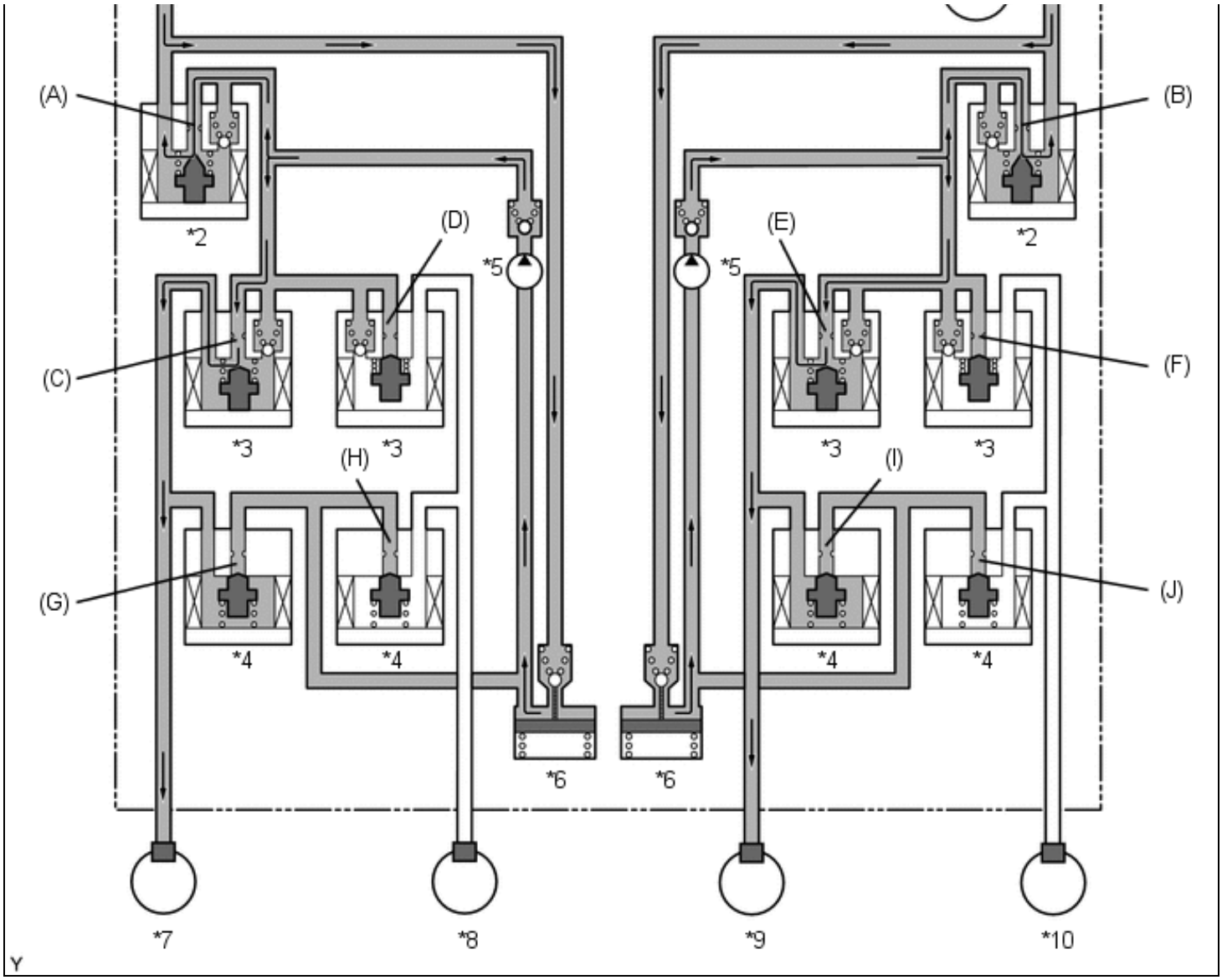


| | | | |
|---|---|---|---|
| *1 | Master Cylinder Pressure Sensor | *2 | Master Cylinder Cut Solenoid Valve |
| *3 | Pressure Holding Solenoid Valve | *4 | Pressure Reduction Solenoid Valve |
| *5 | Pump | *6 | Reservoir |
| *7 | Front Left Wheel Cylinder | *8 | Rear Right Wheel Cylinder |
| *9 | Rear Left Wheel Cylinder | *10 | Front Right Wheel Cylinder |
| *a | From Master Cylinder | - | - |

**Brake Actuator Operation in Auto LSD (Front Left Drive Wheel Slipping)**

| ITEM | | AUTO LSD OPERATION | | | |
|---|---|---|---|---|---|
| | | NOT ACTIVATED | PRESSURE INCREASE MODE | PRESSURE HOLDING MODE | PRESSURE REDUCTION MODE |
| Pump | | Off | On | ← | ← |
| Master Cylinder Cut Solenoid Valve | Port (A) | Off (Open) | On* | ← | ← |
| | Port (B) | Off (Open) | ← | ← | ← |

| | | | | | | |
|---|---|---|---|---|---|---|
| Front Brake | Pressure Holding Solenoid Valve | Port (C) | Off (Open) | ← | On (Closed) | ← |
| | | Port (F) | Off (Open) | On (Closed) | ← | ← |
| | Pressure Reduction Solenoid Valve | Port (G) | Off (Closed) | ← | ← | On (Open) |
| | | Port (J) | Off (Closed) | ← | ← | ← |
| | Wheel Cylinder Pressure | Right | - | - | - | - |
| | | Left | - | Increases | Holds | Reduces |
| Rear Brake | Pressure Holding Solenoid Valve | Port (D) | Off (Open) | On (Closed) | ← | ← |
| | | Port (E) | Off (Open) | On (Closed) | ← | ← |
| | Pressure Reduction Solenoid Valve | Port (H) | Off (Closed) | ← | ← | ← |
| | | Port (I) | Off (Closed) | ← | ← | ← |
| | Wheel Cylinder Pressure | Right | - | - | - | - |
| | | Left | - | - | - | - |

**HINT:**

*: The solenoid valve switches the hydraulic pressure between "open" and "closed" in accordance with the operating conditions by adjusting continually.

(d) TRAC

(1) The fluid pressure generated by the pump is regulated by the master cylinder cut solenoid valve to the required pressure. Thus, the wheel cylinders of the drive wheels are controlled in the following 3 modes: pressure increase, pressure holding and pressure reduction modes to control the slippage of the drive wheels. The pressure holding solenoid valve and the pressure reduction solenoid valve are turned on or off in accordance with the ABS and EBD operation patterns.

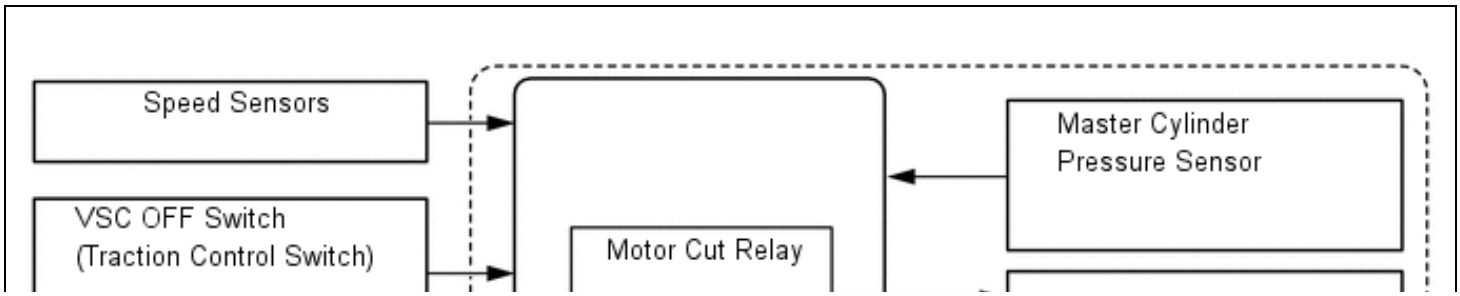

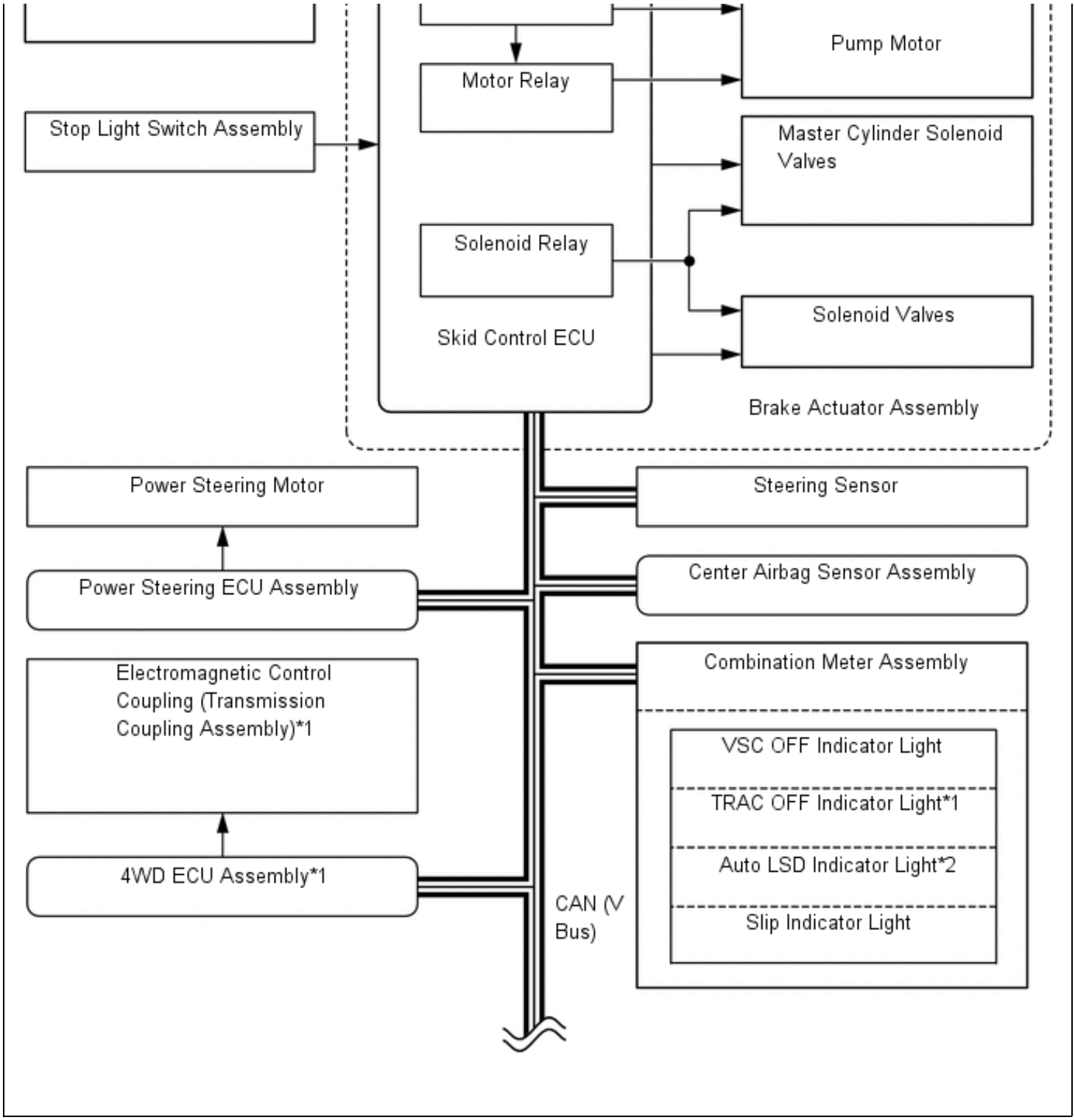
Pump Motor
Motor Relay
Stop Light Switch Assembly
Master Cylinder Solenoid Valves
Solenoid Relay
Solenoid Valves
Skid Control ECU
Brake Actuator Assembly
Power Steering Motor
Steering Sensor
Power Steering ECU Assembly
Center Airbag Sensor Assembly
Electromagnetic Control Coupling (Transmission Coupling Assembly)*1
Combination Meter Assembly
VSC OFF Indicator Light
TRAC OFF Indicator Light*1
Auto LSD Indicator Light*2
Slip Indicator Light
4WD ECU Assembly*1
CAN (V Bus)

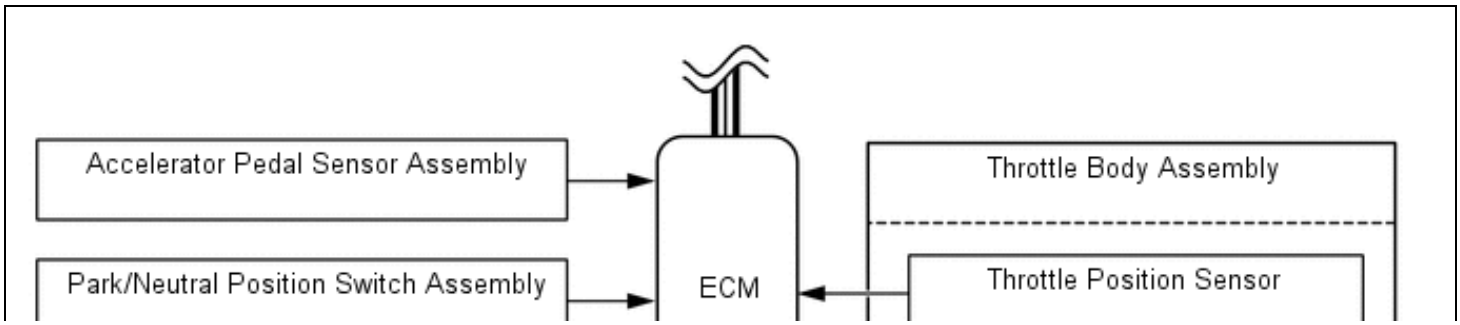
Accelerator Pedal Sensor Assembly
Throttle Body Assembly
Park/Neutral Position Switch Assembly
ECM
Throttle Position Sensor

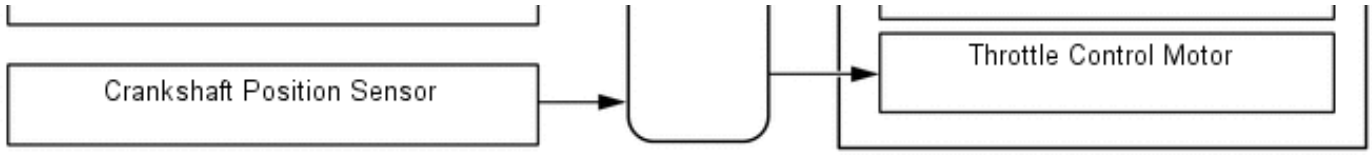


*1: AWD models

*2: 2WD models

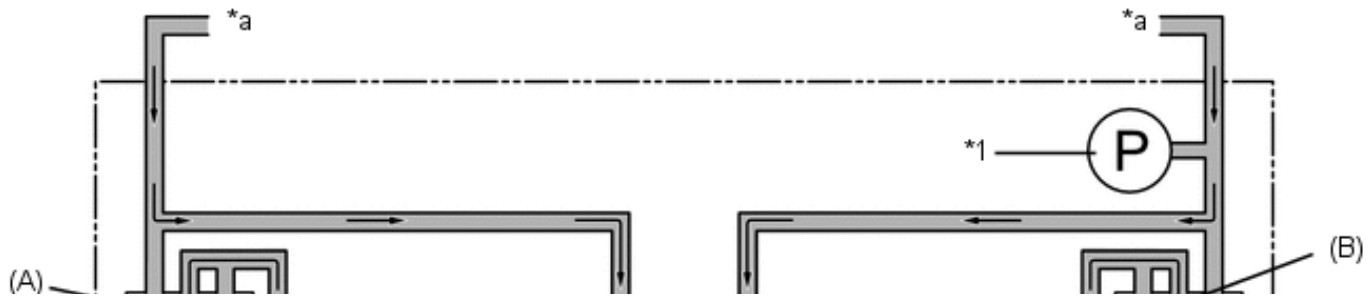

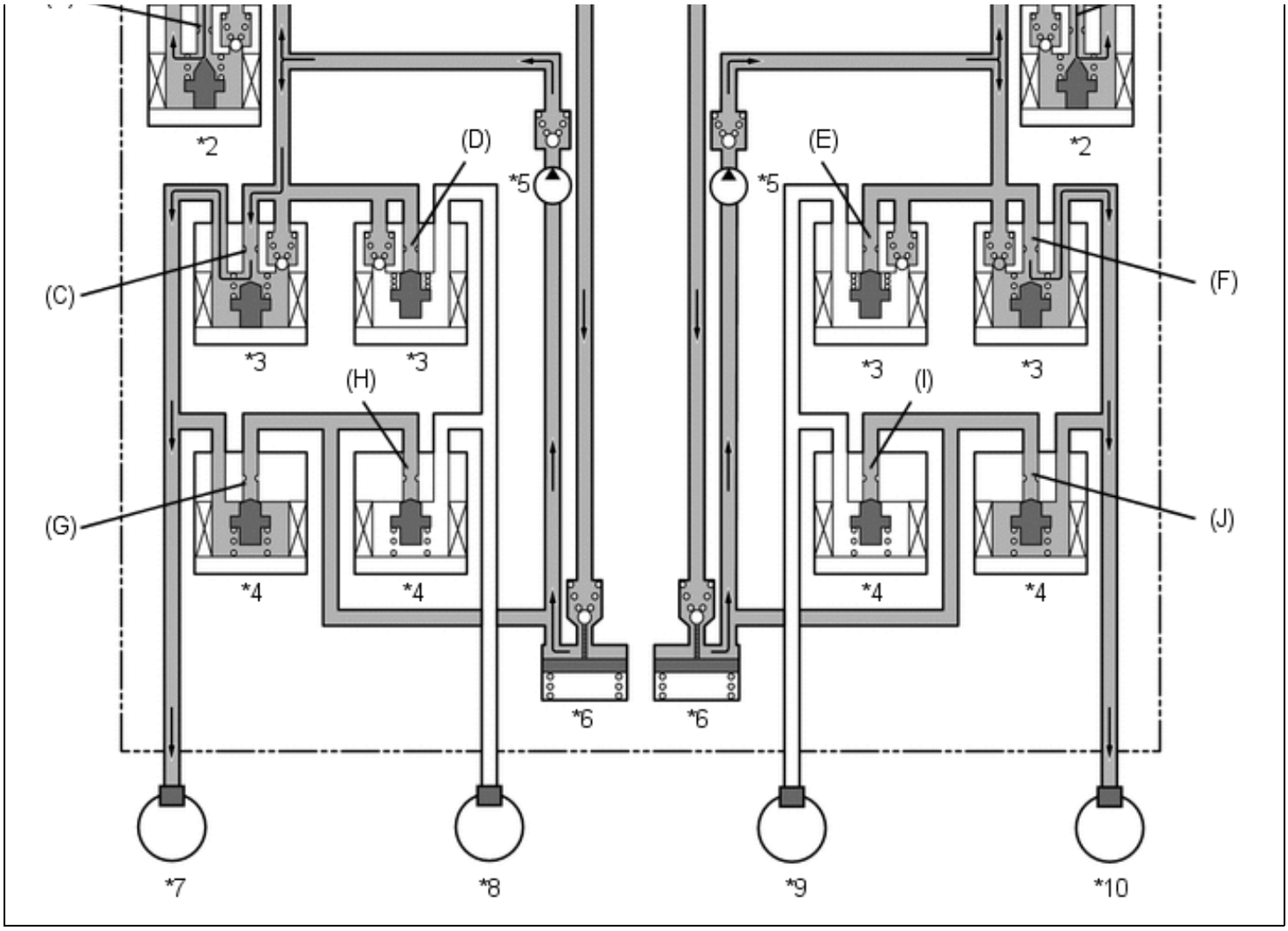


| | | | |
|---|---|---|---|
| *1 | Master Cylinder Pressure Sensor | *2 | Master Cylinder Cut Solenoid Valve |
| *3 | Pressure Holding Solenoid Valve | *4 | Pressure Reduction Solenoid Valve |
| *5 | Pump | *6 | Reservoir |
| *7 | Front Left Wheel Cylinder | *8 | Rear Right Wheel Cylinder |
| *9 | Rear Left Wheel Cylinder | *10 | Front Right Wheel Cylinder |
| *a | From Master Cylinder | - | - |

**Brake Actuator Operation in TRAC (2WD Models)**

| ITEM | | | TRAC OPERATION | | | |
|---|---|---|---|---|---|---|
| | | | NOT ACTIVATED | PRESSURE INCREASE MODE | PRESSURE HOLDING MODE | PRESSURE REDUCTION MODE |
| Pump | | | Off | On | ← | ← |
| Master Cylinder Cut Solenoid Valve | | Port (A) | Off (Open) | On* | ← | ← |
| | | Port (B) | Off (Open) | On* | ← | ← |
| | Pressure Holding Solenoid Valve | Port (C) | Off (Open) | ← | On (Closed) | ← |
| | | Port | Off (Open) | ← | On (Closed) | ← |

| | | | | | | |
|---|---|---|---|---|---|---|
| | | (F) | Off (Open) | ← | On (Closed) | ← |
| Front Brake | Pressure Reduction Solenoid Valve | Port (G) | Off (Closed) | ← | ← | On (Open) |
| | | Port (J) | Off (Closed) | ← | ← | On (Open) |
| | Wheel Cylinder Pressure | Right | - | Increases | Holds | Reduces |
| | | Left | - | Increases | Holds | Reduces |
| Rear Brake | Pressure Holding Solenoid Valve | Port (D) | Off (Open) | On (Closed) | ← | ← |
| | | Port (E) | Off (Open) | On (Closed) | ← | ← |
| | Pressure Reduction Solenoid Valve | Port (H) | Off (Closed) | ← | ← | ← |
| | | Port (I) | Off (Closed) | ← | ← | ← |
| | Wheel Cylinder Pressure | Right | - | - | - | - |
| | | Left | - | - | - | - |

**HINT:**

*: The solenoid valve switches the hydraulic pressure between "open" and "closed" in accordance with the operating conditions by adjusting continually.

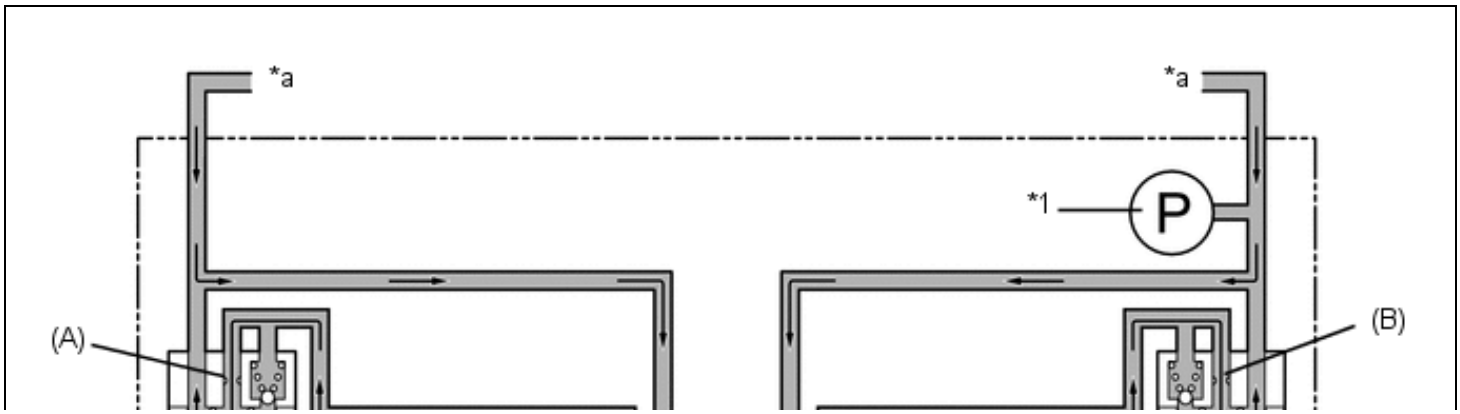

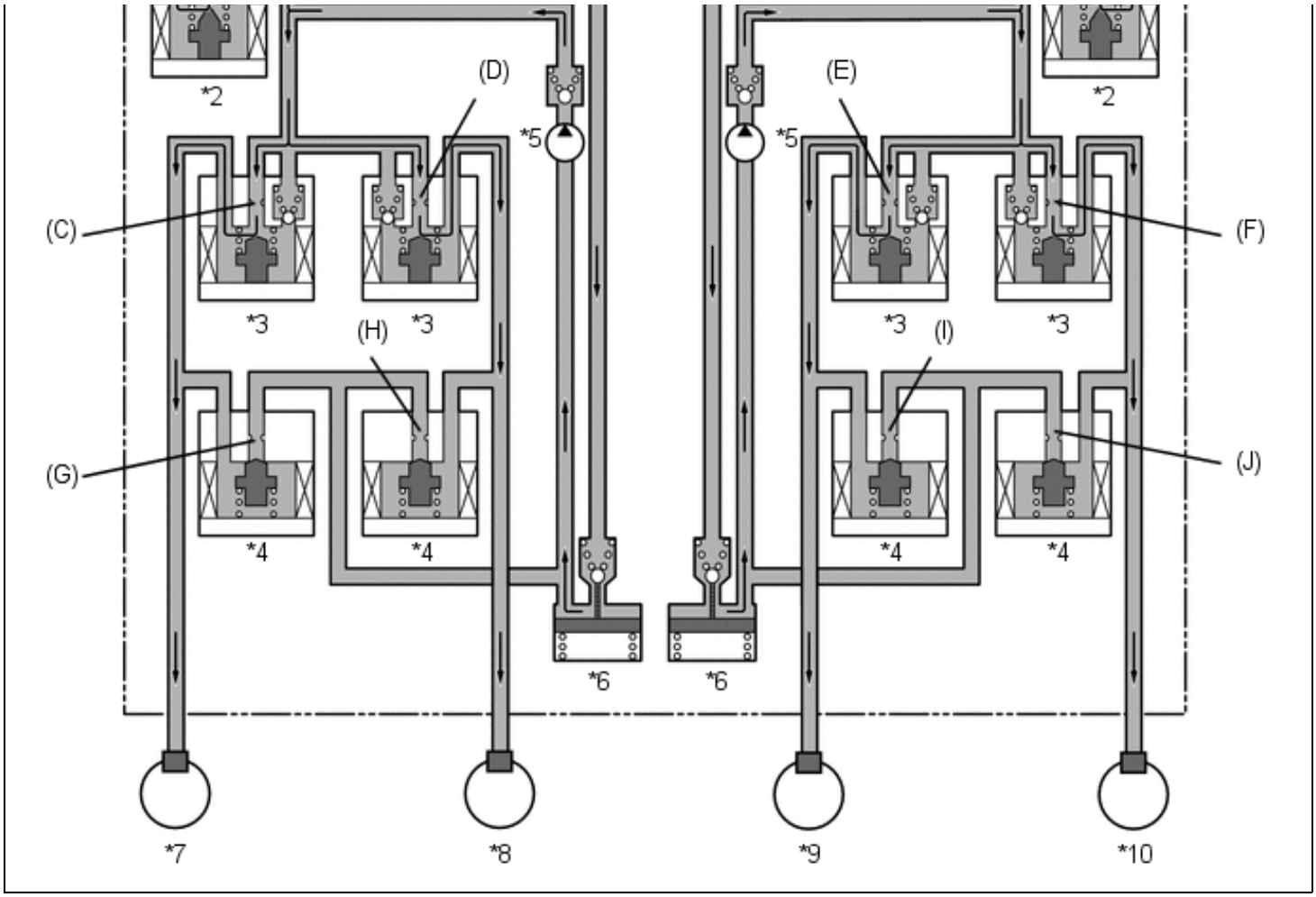


| | | | |
|---|---|---|---|
| *1 | Master Cylinder Pressure Sensor | *2 | Master Cylinder Cut Solenoid Valve |
| *3 | Pressure Holding Solenoid Valve | *4 | Pressure Reduction Solenoid Valve |
| *5 | Pump | *6 | Reservoir |
| *7 | Front Left Wheel Cylinder | *8 | Rear Right Wheel Cylinder |
| *9 | Rear Left Wheel Cylinder | *10 | Front Right Wheel Cylinder |
| *a | From Master Cylinder | - | - |

**Brake Actuator Operation in TRAC (AWD Models)**

| ITEM | | | TRAC OPERATION | | | |
|---|---|---|---|---|---|---|
| | | | NOT ACTIVATED | PRESSURE INCREASE MODE | PRESSURE HOLDING MODE | PRESSURE REDUCTION MODE |
| Pump | | | Off | On | ← | ← |
| Master Cylinder Cut Solenoid Valve | | Port (A) | Off (Open) | On* | ← | ← |
| | | Port (B) | Off (Open) | On* | ← | ← |
| | Pressure Holding Solenoid Valve | Port (C) | Off (Open) | ← | On (Closed) | ← |
| | | Port (F) | Off (Open) | ← | On (Closed) | ← |

| | | | | | | |
|---|---|---|---|---|---|---|
| Front Brake | Pressure Reduction Solenoid Valve | Port (G) | Off (Closed) | ← | ← | On (Open) |
| | | Port (J) | Off (Closed) | ← | ← | On (Open) |
| | Wheel Cylinder Pressure | Right | - | Increases | Holds | Reduces |
| | | Left | - | Increases | Holds | Reduces |
| Rear Brake | Pressure Holding Solenoid Valve | Port (D) | Off (Open) | ← | On (Closed) | ← |
| | | Port (E) | Off (Open) | ← | On (Closed) | ← |
| | Pressure Reduction Solenoid Valve | Port (H) | Off (Closed) | ← | ← | On (Open) |
| | | Port (I) | Off (Closed) | ← | ← | On (Open) |
| | Wheel Cylinder Pressure | Right | - | Increases | Holds | Reduces |
| | | Left | - | Increases | Holds | Reduces |

**HINT:**

*: The solenoid valve switches the hydraulic pressure between "open" and "closed" in accordance with the operating conditions by adjusting continually.

(e) VSC

(1) The VSC, by way of the solenoid valves, controls the fluid pressure generated by the pump and applies it to the brake wheel cylinder of each wheel in the following 3 modes: pressure increase, pressure holding and pressure reduction modes. As a result, the tendency for front wheel skid or rear wheel skid is controlled.

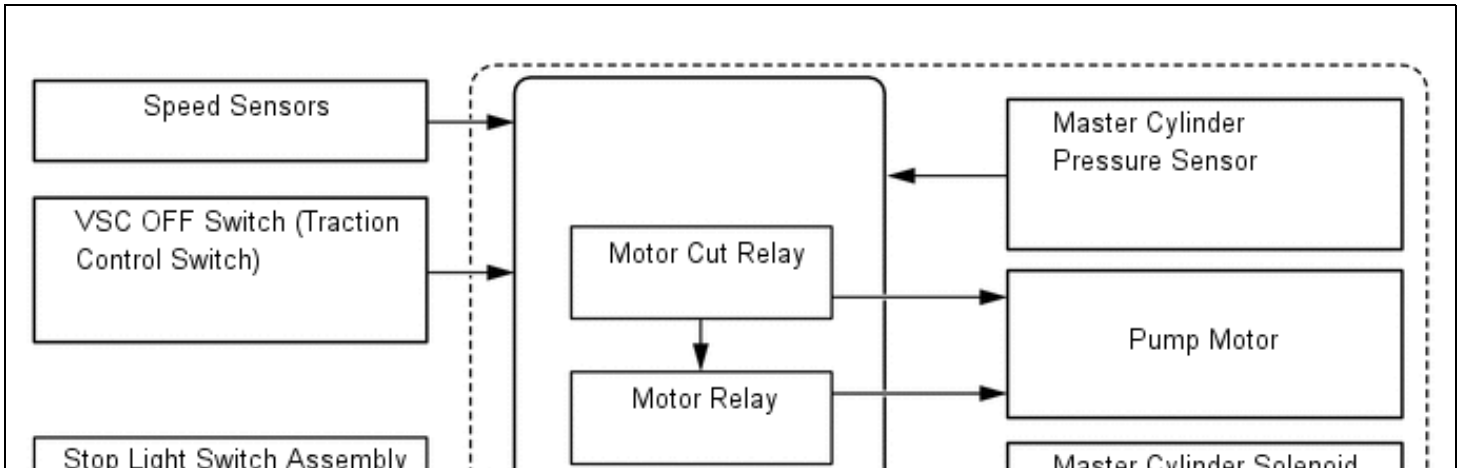

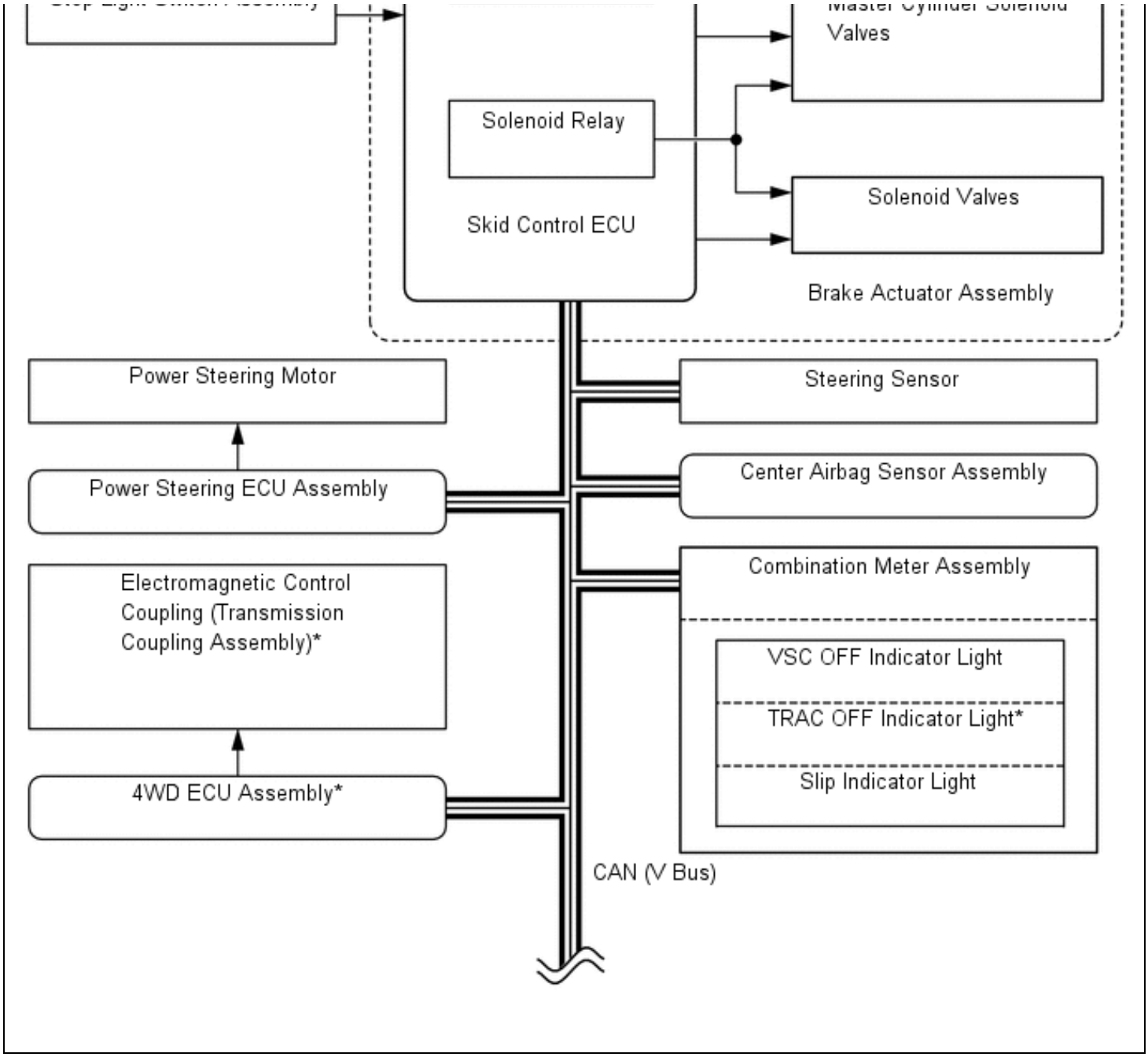
Valves
Solenoid Relay
Solenoid Valves
Skid Control ECU
Brake Actuator Assembly
Power Steering Motor
Steering Sensor
Power Steering ECU Assembly
Center Airbag Sensor Assembly
Combination Meter Assembly
Electromagnetic Control Coupling (Transmission Coupling Assembly)*
VSC OFF Indicator Light
TRAC OFF Indicator Light*
Slip Indicator Light
4WD ECU Assembly*
CAN (V Bus)

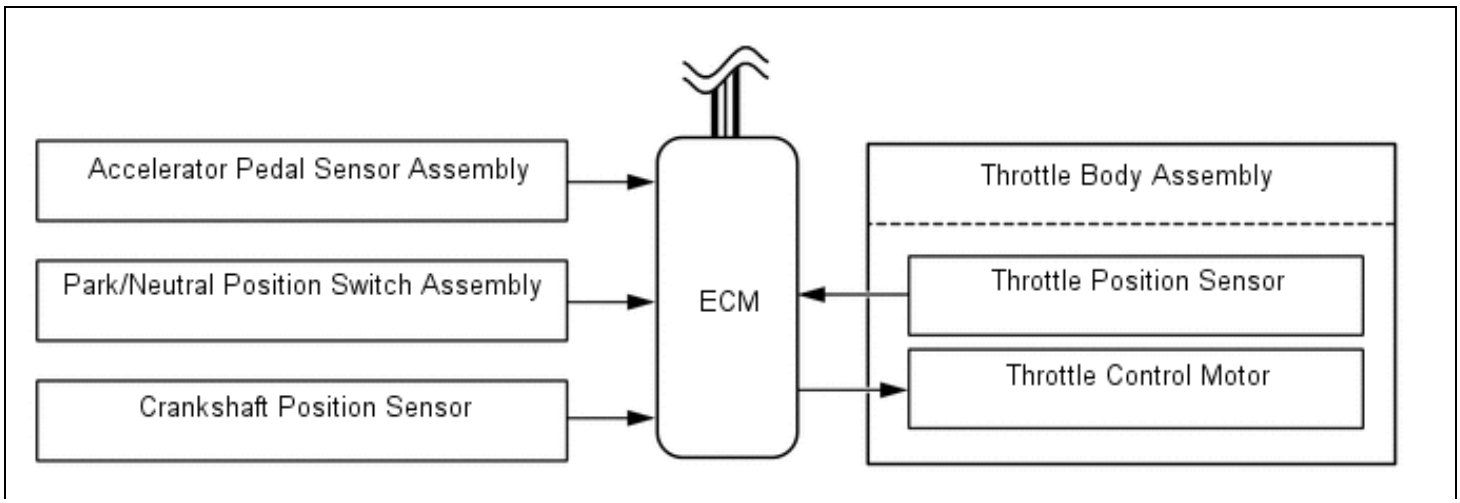
Accelerator Pedal Sensor Assembly
Park/Neutral Position Switch Assembly
Crankshaft Position Sensor
ECM
Throttle Body Assembly
Throttle Position Sensor
Throttle Control Motor

*: AWD models

(2) In the front wheel skid restraining control, the brakes of the front wheels and the brake of the rear wheel on the inner circle of the turn are applied. Also, depending on whether the brake is on or off and also depending on the vehicle conditions, there are circumstances in which the brake might not be applied to the wheels even if the wheel is targeted for braking. The following diagram shows the hydraulic circuit in the pressure increase mode, as it controls the front wheel skid condition while the vehicle makes a right turn. In other operating modes, the pressure holding valve and the pressure reduction valve are turned on or off in accordance with the ABS and EBD operation patterns.

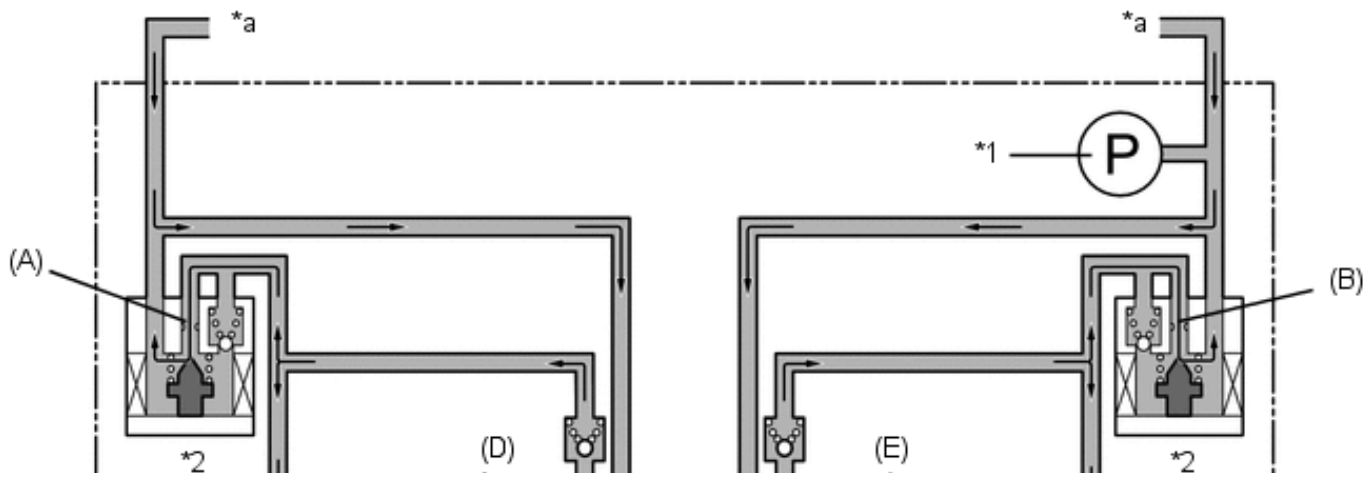

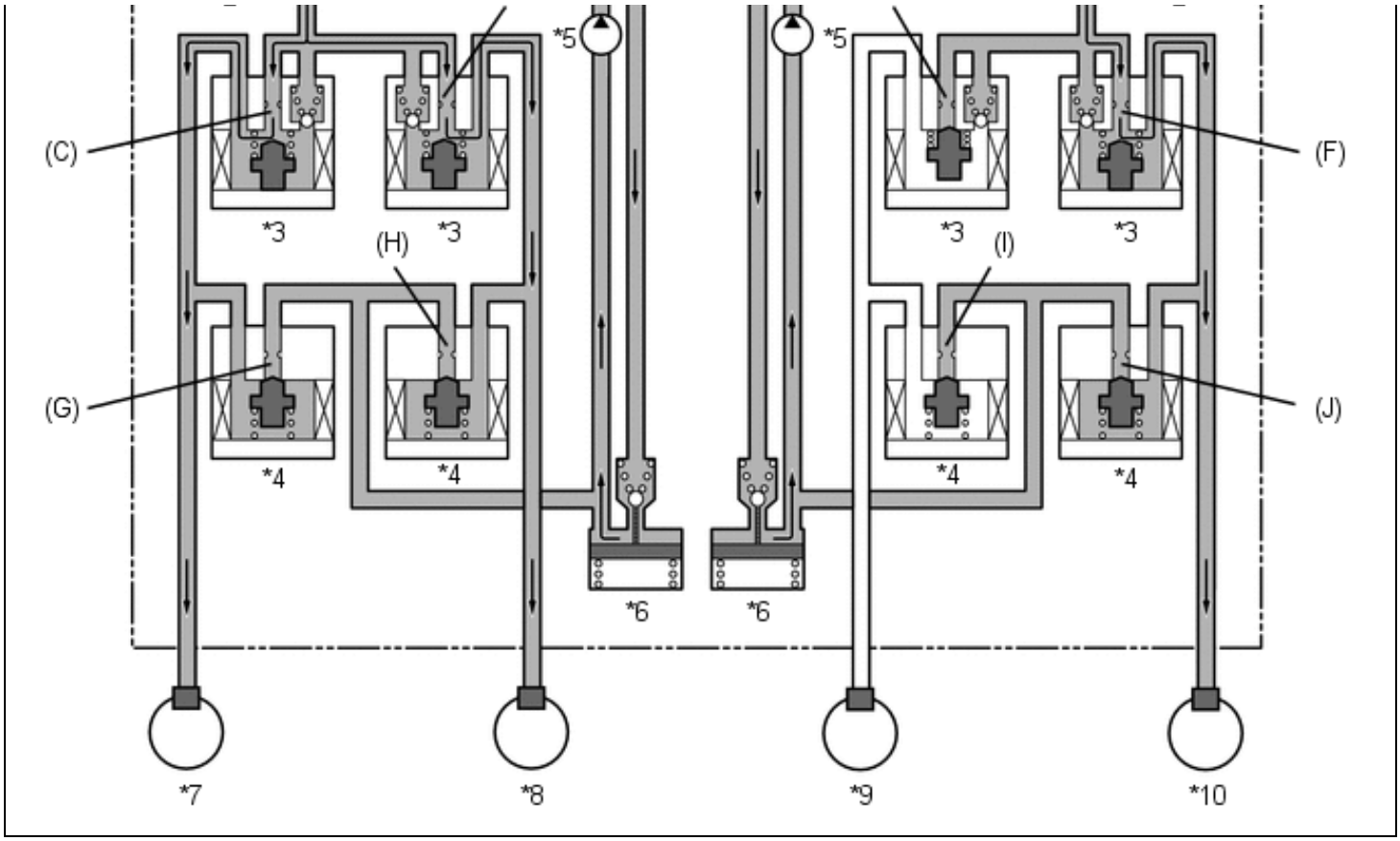


| | | | |
|---|---|---|---|
| *1 | Master Cylinder Pressure Sensor | *2 | Master Cylinder Cut Solenoid Valve |
| *3 | Pressure Holding Solenoid Valve | *4 | Pressure Reduction Solenoid Valve |
| *5 | Pump | *6 | Reservoir |
| *7 | Front Left Wheel Cylinder | *8 | Rear Right Wheel Cylinder |
| *9 | Rear Left Wheel Cylinder | *10 | Front Right Wheel Cylinder |
| *a | From Master Cylinder | - | - |

**Brake Actuator Operation in VSC (Front Wheel Skid Restraining)**

| ITEM | | | VSC OPERATION | | | |
|---|---|---|---|---|---|---|
| | | | NOT ACTIVATED | PRESSURE INCREASE MODE | PRESSURE HOLDING MODE | PRESSURE REDUCTION MODE |
| Pump | | | Off | On | ← | ← |
| Master Cylinder Cut Solenoid Valve | | Port (A) | Off (Open) | On* | ← | ← |
| | | Port (B) | Off (Open) | On* | ← | ← |
| Front Brake | Pressure Holding Solenoid Valve | Port (C) | Off (Open) | ← | On (Closed) | ← |
| | | Port (F) | Off (Open) | ← | On (Closed) | ← |
| | Pressure Reduction Solenoid Valve | Port (G) | Off (Closed) | ← | ← | On (Open) |
| | | Port | Off | | | On (Open) |

| | | | | | | |
|---|---|---|---|---|---|---|
| | | (J) | (Closed) | ← | ← | On (Open) |
| | Wheel Cylinder Pressure | Right | - | Increases | Holds | Reduces |
| | | Left | - | Increases | Holds | Reduces |
| Rear Brake | Pressure Holding Solenoid Valve | Port (D) | Off (Open) | ← | On (Closed) | ← |
| | | Port (E) | Off (Open) | On (Closed) | ← | ← |
| | Pressure Reduction Solenoid Valve | Port (H) | Off (Closed) | ← | ← | On (Open) |
| | | Port (I) | Off (Closed) | ← | ← | ← |
| | Wheel Cylinder Pressure | Right | - | Increases | Holds | Reduces |
| | | Left | - | Increases | Holds | Reduces |

**HINT:**

*: The solenoid valve switches the hydraulic pressure between "open" and "closed" in accordance with the operating conditions by adjusting continually.

(3) In the rear wheel skid restraining control, the brake of the wheels on the outer circle of the turn is applied. Also, depending on whether the brake is on or off and also depending on the vehicle conditions, there are circumstances in which the brake might not be applied to the wheels even if the wheel is targeted for braking. The following diagram shows the hydraulic circuit in pressure increase mode, as it controls the rear wheel skid condition while the vehicle makes a right turn. In other operating modes, the pressure holding valve and the pressure reduction valve are turned on or off in accordance with the ABS and EBD operation patterns.

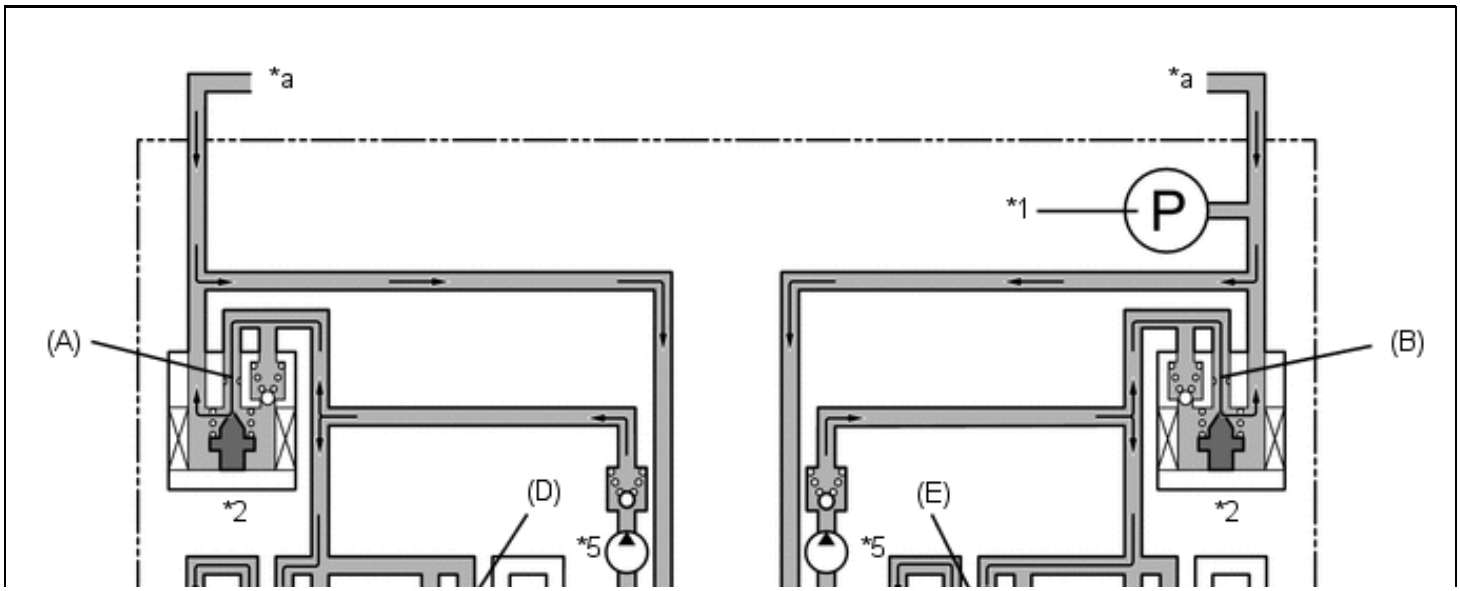

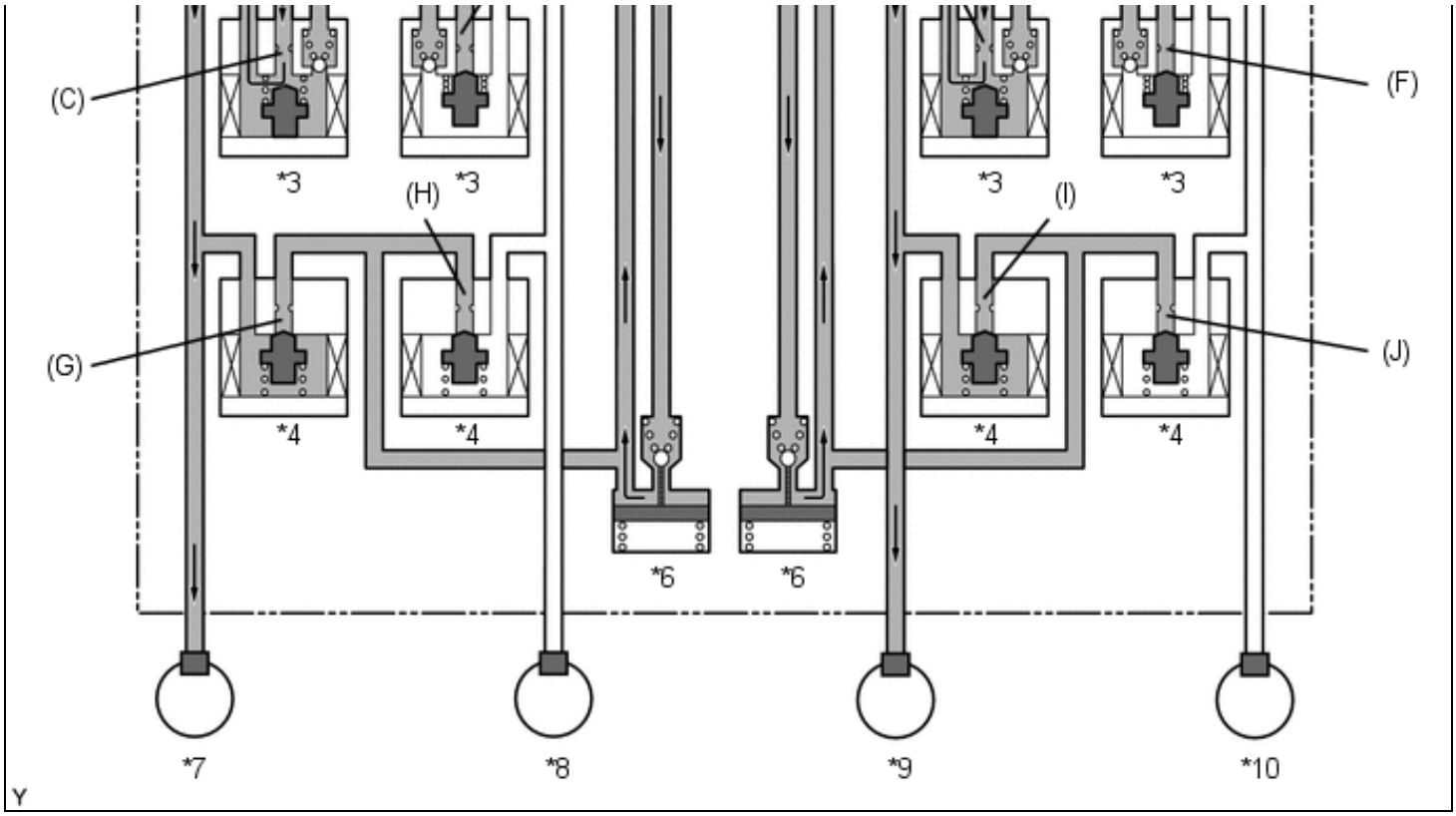


| | | | |
|---|---|---|---|
| *1 | Master Cylinder Pressure Sensor | *2 | Master Cylinder Cut Solenoid Valve |
| *3 | Pressure Holding Solenoid Valve | *4 | Pressure Reduction Solenoid Valve |
| *5 | Pump | *6 | Reservoir |
| *7 | Front Left Wheel Cylinder | *8 | Rear Right Wheel Cylinder |
| *9 | Rear Left Wheel Cylinder | *10 | Front Right Wheel Cylinder |
| *a | From Master Cylinder | - | - |

**Brake Actuator Operation in VSC (Rear Wheel Skid Restraining)**

| ITEM | | | VSC OPERATION | | | |
|---|---|---|---|---|---|---|
| | | | NOT ACTIVATED | PRESSURE INCREASE MODE | PRESSURE HOLDING MODE | PRESSURE REDUCTION MODE |
| Pump | | | Off | On | ← | ← |
| Master Cylinder Cut Solenoid Valve | | Port (A) | Off (Open) | On* | ← | ← |
| | | Port (B) | Off (Open) | ← | ← | ← |
| Front Brake | Pressure Holding Solenoid Valve | Port (C) | Off (Open) | ← | On (Closed) | ← |
| | | Port (F) | Off (Open) | On (Closed) | ← | ← |
| | Pressure Reduction Solenoid Valve | Port (G) | Off (Closed) | ← | ← | On (Open) |
| | | Port (J) | Off (Closed) | ← | ← | ← |

| | | | | | | |
|---|---|---|---|---|---|---|
| | Wheel Cylinder Pressure | Right | - | - | - | - |
| | | Left | - | Increases | Holds | Reduces |
| Rear Brake | Pressure Holding Solenoid Valve | Port (D) | Off (Open) | On (Closed) | ← | ← |
| | | Port (E) | Off (Open) | ← | On (Closed) | ← |
| | Pressure Reduction Solenoid Valve | Port (H) | Off (Closed) | ← | ← | ← |
| | | Port (I) | Off (Closed) | ← | ← | ← |
| | Wheel Cylinder Pressure | Right | - | - | - | - |
| | | Left | - | Increases | Holds | Reduces |

**HINT:**

*: The solenoid valve switches the hydraulic pressure between "open" and "closed" in accordance with the operating conditions by adjusting continually.

(f) Cooperative Control

(1) The operation of the solenoid valves under the cooperative control is the same as the TRAC or VSC operation.