| | | |
|---|---|---|
| **Last Modified:** 03-12-2013 | 6.4 F | **Doc ID:** NM1000000004HBY |
| **Model Year:** 2013 | **Model:** RAV4 | **Prod Date Range:** [12/2012 - ] |
| **Title:** 2AR-FE ENGINE CONTROL: SFI SYSTEM: KNOCK CONTROL SENSOR; 2013 MY RAV4 [12/2012 - ] | | |

# KNOCK CONTROL SENSOR

## 1. CONSTRUCTION

(a) In a conventional knock control sensor (resonant type), a vibration plate is built into the sensor. This plate has the same resonance point as the knocking* frequency of the engine block. This sensor can only detect vibrations in this frequency band.

**HINT:**

*: The term "knock" or "knocking" is used in this case to describe either preignition or detonation of the air fuel mixture in the combustion chamber. This preignition or detonation refers to the air fuel mixture being ignited earlier than is advantageous. This use of "knock" or "knocking" is not primarily used to refer to a loud mechanical noise that may be produced by an engine.

(b) A flat type knock control sensor (non-resonant type) has the ability to detect vibrations in a wider frequency band (from approximately 5 kHz to 15 kHz). The sensor has the following features:

- The engine knocking frequency will vary slightly depending on the engine speed. The flat type knock control sensor can detect vibrations even when the engine knocking frequency changes. Due to the use of the flat type knock control sensor, the vibration detection ability has been increased compared to a conventional type knock control sensor, and more precise ignition timing control is possible.

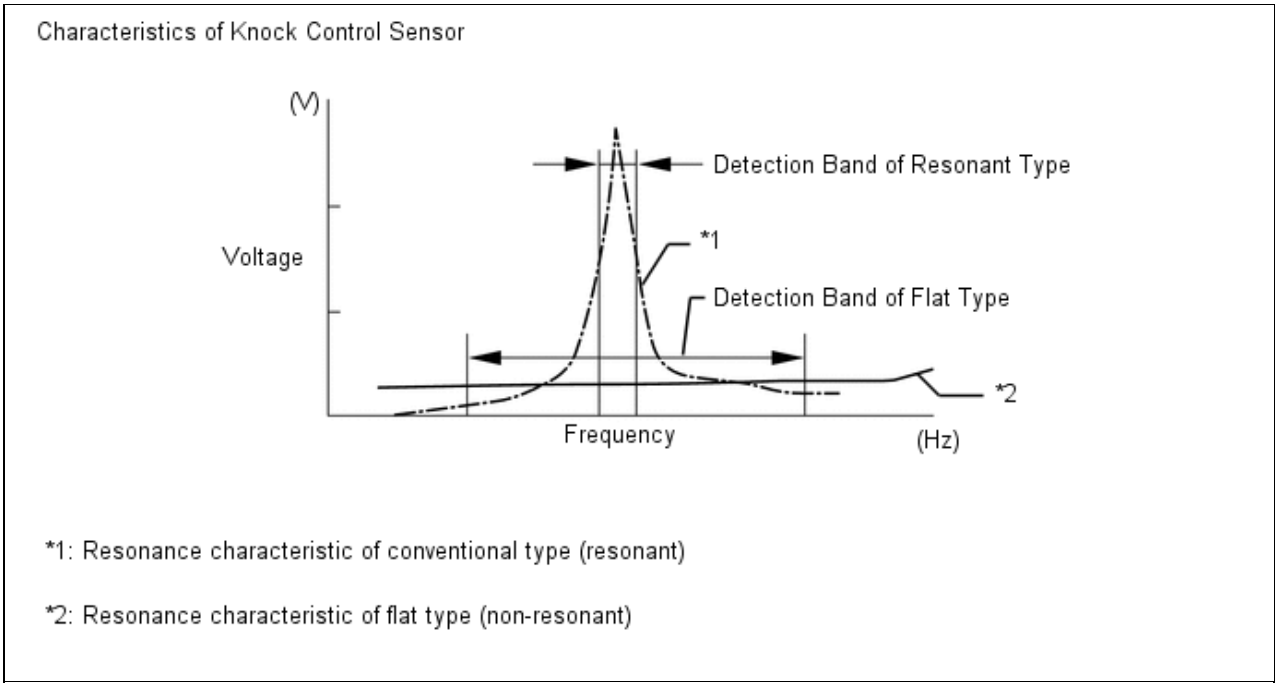


(c) A flat type knock control sensor is installed in an engine by placing it over the stud bolt installed on the cylinder block. For this reason, a hole for the stud bolt exists in the center of the sensor.

(d) In the sensor, a steel weight is located in the upper portion. An insulator is located between the weight and the piezoelectric element.

(e) An open/short circuit detection resistor is integrated in the sensor. When the ignition switch (engine switch*) is on (IG), the open/short circuit detection resistor in the knock control sensor and the resistor in the ECM keep the voltage at terminal KNK1 constant. An Integrated Circuit (IC) in the ECM constantly monitors the voltage of terminal KNK1. If the open/short circuit occurs between the knock control sensor and the ECM, the voltage of terminal KNK1 will change and the ECM will detect the open/short circuit and store a Diagnostic Trouble Code (DTC).

*: Models with smart key system

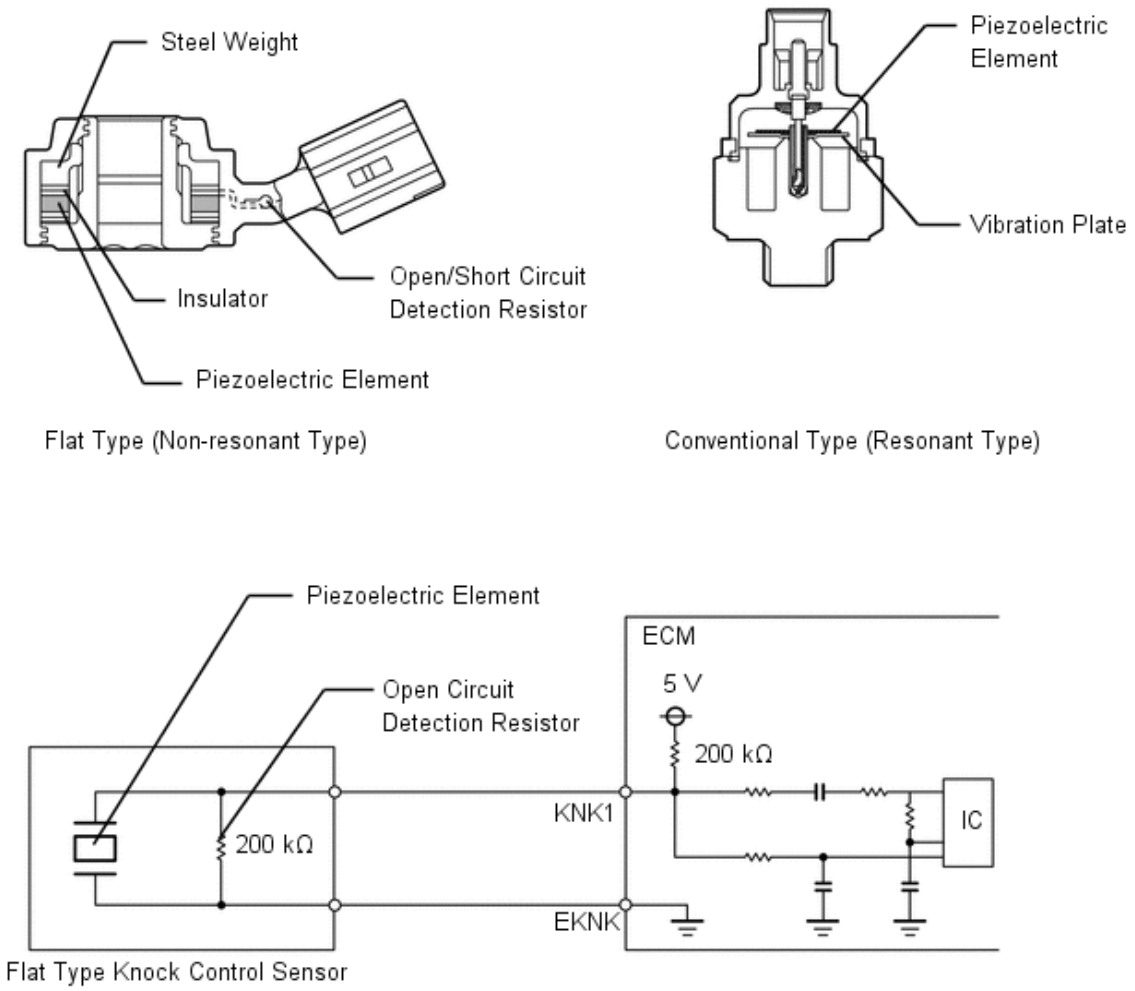


(f) Vibrations caused by knocking are transmitted to the steel weight. The inertia of this weight applies pressure to the piezoelectric element. This action generates electromotive force.

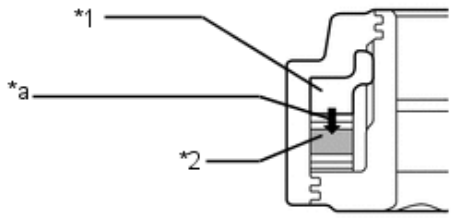

| | | | |
|---|---|---|---|
| *1 | Steel Weight | *2 | Piezoelectric Element |
| *a | Inertia | - | - |

(g) To prevent water accumulation in the connecter, make sure to install the flat type knock control sensor in the position shown in the following illustration:

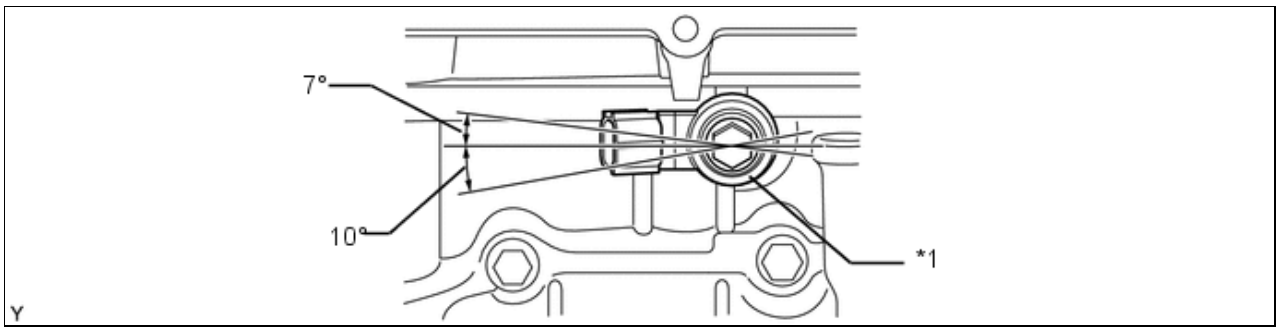


| | | | |
|---|---|---|---|
| *1 | Knock Control Sensor | - | - |