| | | |
|---|---|---|
| **Last Modified:** 03-12-2013 | 6.4 F | **Doc ID:** NM1000000004IEB |
| **Model Year:** 2013 | **Model:** RAV4 | **Prod Date Range:** [12/2012 - ] |
| **Title:** PARK ASSIST / MONITORING: MONITOR SYSTEM: GENERAL; 2013 MY RAV4 [12/2012 - ] | | |

# GENERAL

## 1. OUTLINE

(a) To assist the driver in parking the vehicle by monitoring the area behind it, the rear view monitor system has a rear television camera assembly mounted on the back door.

(b) A view of the area behind the vehicle will be displayed on the radio and display receiver assembly.

(c) When the shift lever is in R and the ignition switch is ON, the rear view monitor system displays an image of the area behind the vehicle on the radio and display receiver assembly via the rear television camera assembly.

(d) When the driver moves the shift lever to any position other than R, the rear view display will stop.

## 2. PRECAUTION

(a) Ignition Switch Expressions

(1) The type of ignition switch used on this model differs depending on the specifications of the vehicle. The expressions listed in the table below are used in this section.

| EXPRESSION | IGNITION SWITCH (POSITION) | ENGINE SWITCH (CONDITION) |
|---|---|---|
| Ignition Switch off | LOCK | Off (Lock) |
| Ignition Switch ACC | ACC | On (ACC) |
| Ignition Switch ON | ON | On (IG) |
| Engine Start | START | On (Start) |

(b) General Precautions

(1) Do not rely entirely on the rear view monitor system. Use caution, just as when driving any vehicle.

(2) Never drive while looking only at the screen. The image on the screen may differ from actual conditions. Backing up while looking only at the screen may cause an accident or cause the vehicle to hit an object. Be sure to confirm the safety of the surroundings when driving the vehicle.

(c) Television Camera Precautions

(1) The area covered by the rear television camera assembly is limited. The rear television camera assembly does not show objects close to either corner of the bumper or show items under the bumper. The clearance distance that appears on the screen is different from the actual distance because the rear television camera assembly uses a wide-angle lens.

(2) The camera is unable to capture a clear image if the glass in front of the lens is dirty. Therefore, clean the glass if it has water drops, snow or dirt on it.

(3) In the following cases, it may become difficult to see the images on the screen, but this is not a malfunction:

- In the dark (for example, at night).
- When the temperature near the lens is very high or low.
- When water droplets are adhering to the camera, or when humidity is high (for example, when it rains).
- When the camera has scratches or dirt on it.
- When foreign matter (for example, mud) is adhering to the camera lens.
- When the sun or the beam of headlights is shining directly into the camera lens.

(4) Flicker effect: when the camera is used under fluorescent lights, sodium lights, mercury lights etc., the lights and the illuminated areas may appear to flicker.

(5) When washing the vehicle with a high-pressure washer, do not spray water on the rear television camera assembly or the surrounding area. High-pressure water can damage the camera.

(d) Road Condition Precautions

(1) Depending on the number of occupants, the load conditions, the slope of the road and bumps in the road, a disparity may occur between the display indication and the actual distance to the road surface. Operate the vehicle carefully.

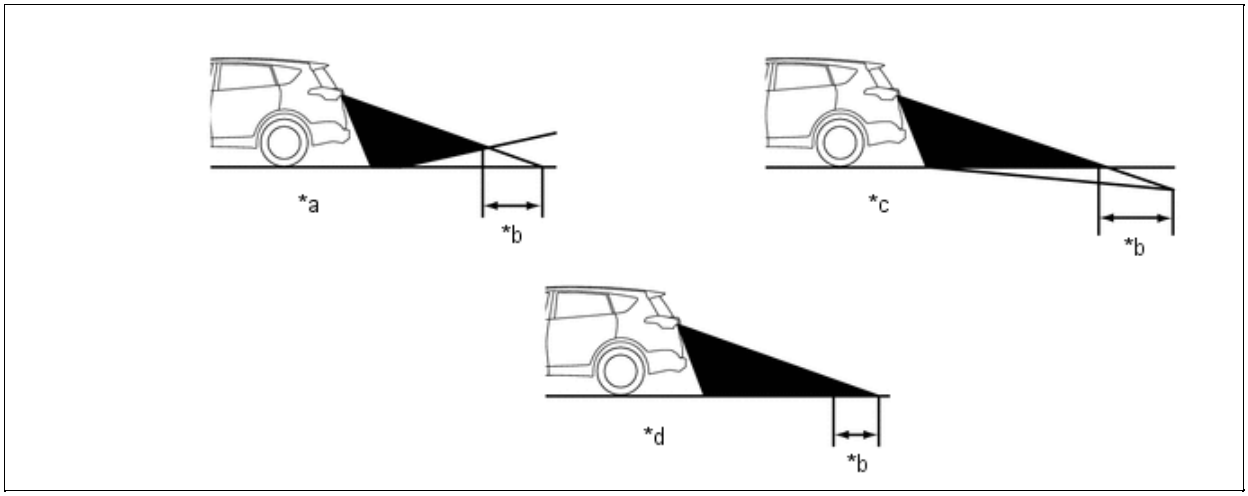


| | | | |
|---|---|---|---|
| *a | Steep Uphill Incline behind Vehicle | *b | Disparity |
| *c | Steep Downhill Incline behind Vehicle | *d | Vehicle Posture Changed by Passengers and Load |

(2) If a steep uphill incline is behind the vehicle, an obstacle will appear to be further away than it actually is, as shown in the illustration below:

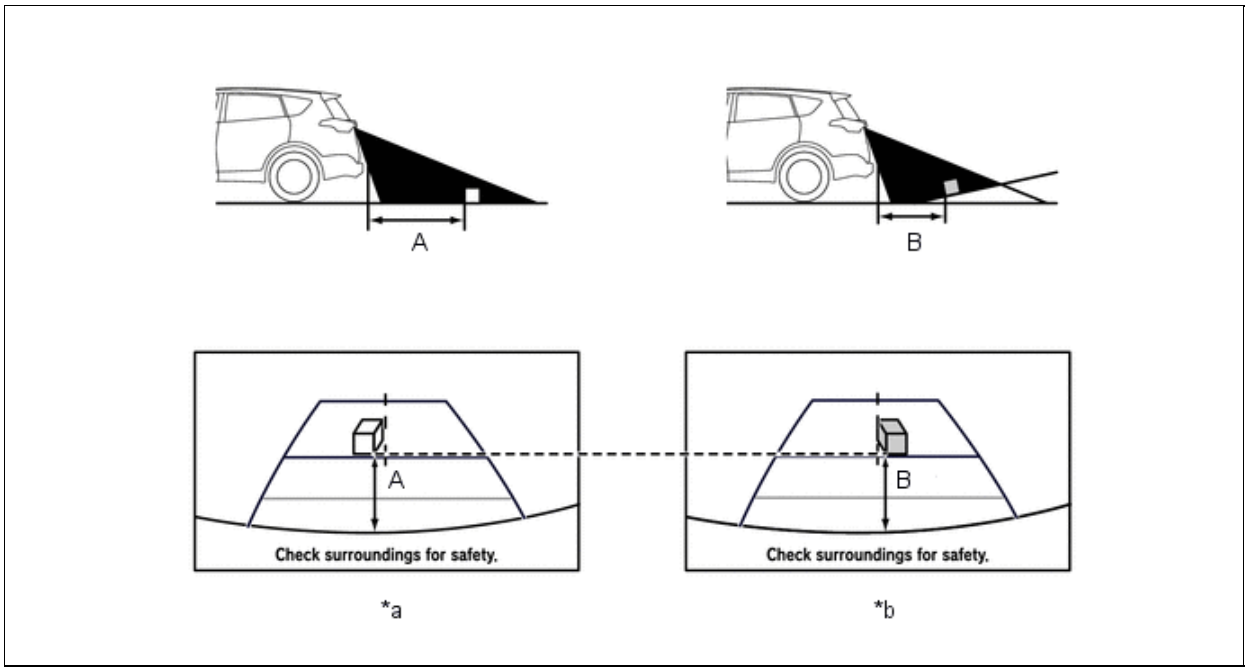


| | | | |
|---|---|---|---|
| *a | Screen Image in Case A | *b | Screen Image in Case B |

(3) Drive carefully when any 3-dimensional objects such as walls or vehicles are behind the vehicle as the distance and estimated guide lines are provided based on the road surface.

- The distance indication as shown on the screen varies between 3-dimensional objects such as a vehicle and objects on a flat plane such as the road surface. As shown in the following illustration, points A and B are actually vertically in the same position and point C is a short distance away from them: however, the points are displayed in order of distance from the vehicle, B, C and A. Therefore, the vehicle comes into contact with the 3-dimensional object if it is backed up to point B on the screen.

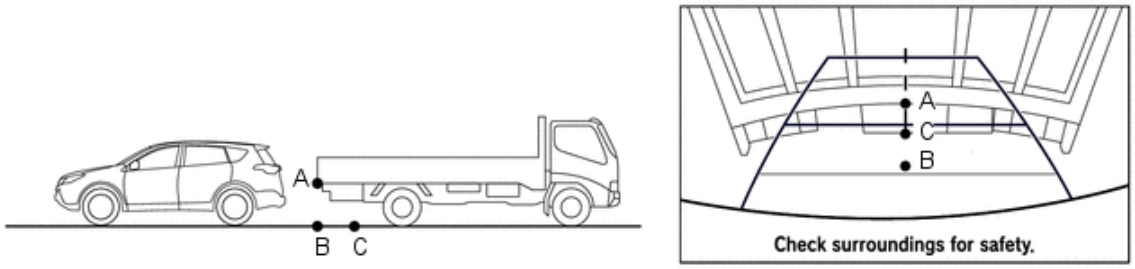
A
B
C
A
C
B
Check surroundings for safety.