| | | |
|---|---|---|
| **Last Modified:** 03-12-2013 | 6.4 F | **Doc ID:** NM1000000005IJ1 |
| **Model Year:** 2013 | **Model:** RAV4 | **Prod Date Range:** [12/2012 - ] |
| **Title:** CRUISE CONTROL: LANE DEPARTURE ALERT SYSTEM: LANE DEPARTURE WARNING CAMERA; 2013 MY RAV4 [12/2012 - ] | | |

# LANE DEPARTURE WARNING CAMERA

## 1. CONSTRUCTION

(a) The lane departure warning camera is mounted near the map light assembly and is used for the lane departure alert system and automatic high beam system.

(b) The lane departure warning camera detects lane markers and calculates the radius to the center of the lane, heading angle deviation, lateral deviation from the center of the lane and the lane width.

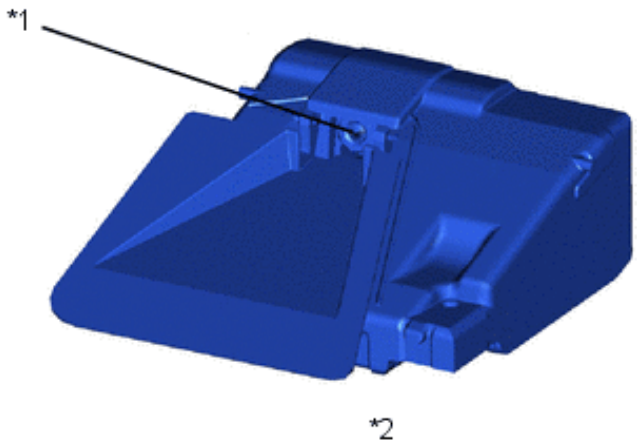


| | | | |
|---|---|---|---|
| *1 | Lens Portion | *2 | Lane Departure Warning Camera |

**HINT:**

When one of the following operations is conducted, the lane departure warning camera angle must be adjusted:

- The lane departure warning camera is removed and reinstalled or replaced.
- Parts relating to the tire or suspension are replaced or adjusted.
- Strong force is applied onto the lane departure warning camera.
- For details, refer to the Repair Manual.

(c) By processing the road image data, the lane departure warning camera detects lane markers and calculates the radius to the center of the lane, heading angle deviation, lateral deviation from the center of the lane and the lane width.

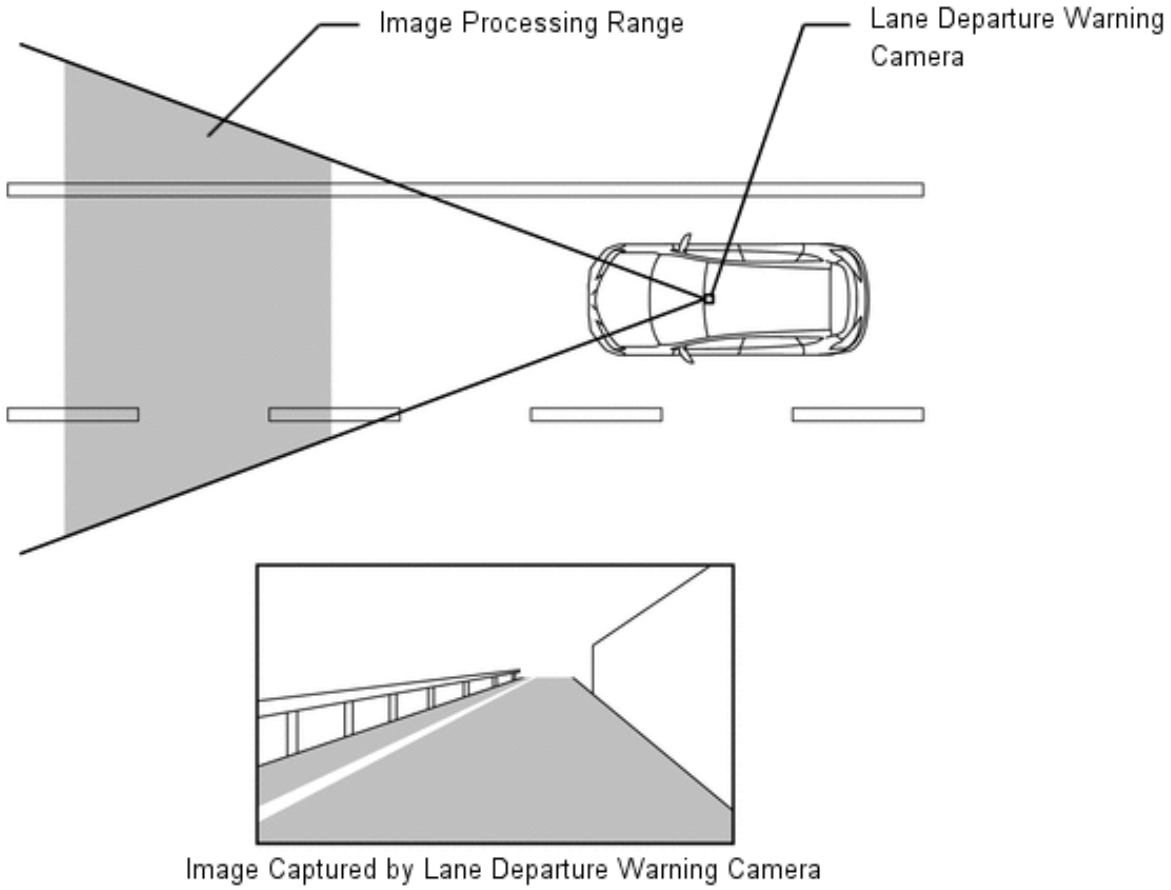


**Lane Departure Warning Camera Calculation**

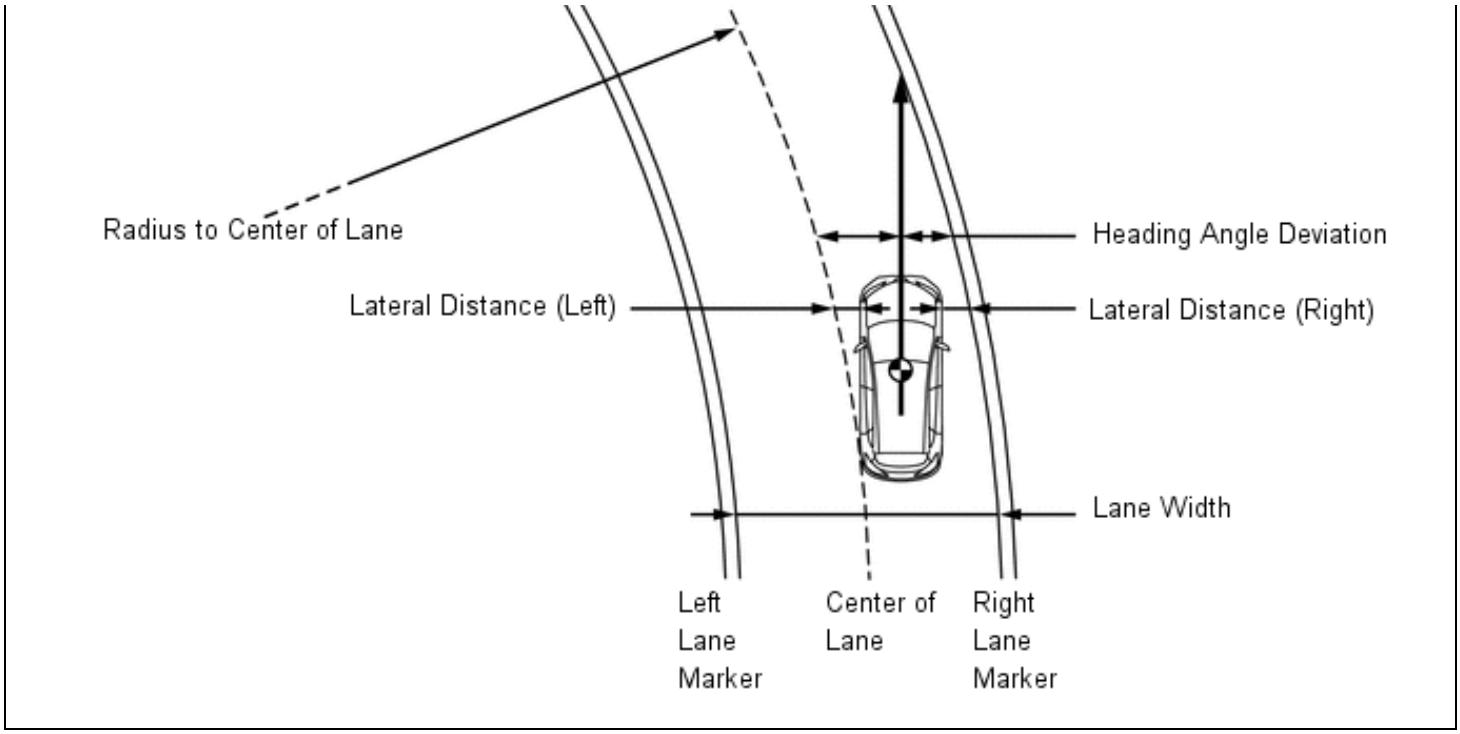
Radius to Center of Lane
Heading Angle Deviation
Lateral Distance (Left)
Lateral Distance (Right)
Lane Width
Left Lane Marker
Center of Lane
Right Lane Marker