| | | |
|---|---|---|
| **Last Modified:** 03-12-2013 | 6.4 F | **Doc ID:** NM1000000005IIC |
| **Model Year:** 2013 | **Model:** RAV4 | **Prod Date Range:** [12/2012 - ] |
| **Title:** HEATING / AIR CONDITIONING: AIR CONDITIONING SYSTEM: QUICK HEATER; 2013 MY RAV4 [12/2012 - ] | | |

# QUICK HEATER

## 1. CONSTRUCTION

(a) The PTC heater (quick heater assembly) consists of a PTC element and an aluminum fin. When current is applied to the PTC element, it generates heat to warm the air that passes through the unit.

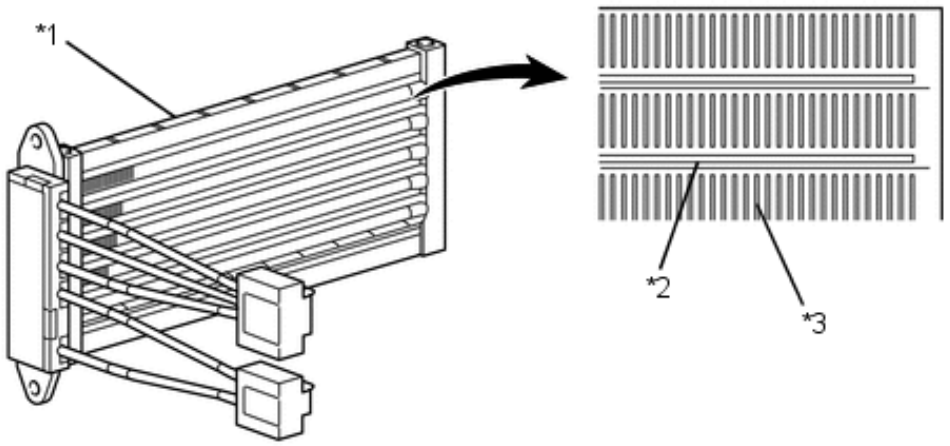


| | | | |
|---|---|---|---|
| *1 | PTC Heater (Quick Heater Assembly) | *2 | PTC Element |
| *3 | Aluminum Fin | - | - |