| | | |
|---|---|---|
| **Last Modified:** 03-12-2013 | 6.4 F | **Doc ID:** NM1000000005FYU |
| **Model Year:** 2013 | **Model:** RAV4 | **Prod Date Range:** [12/2012 - ] |
| **Title:** DOOR / HATCH: POWER BACK DOOR SYSTEM: PARTS LOCATION; 2013 MY RAV4 [12/2012 - ] | | |

# PARTS LOCATION

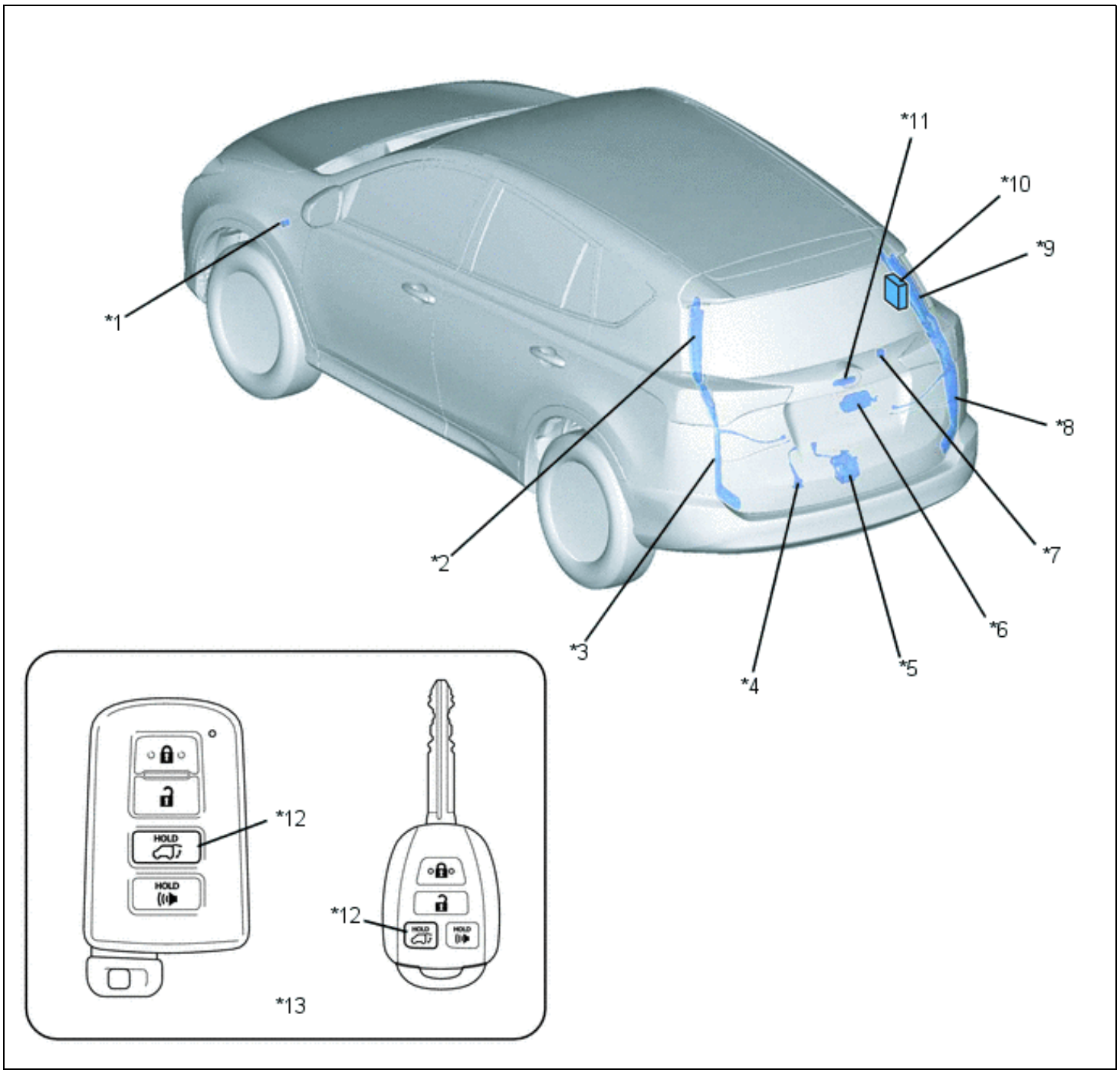


| | | | |
|---|---|---|---|
| *1 | Wireless Door Lock Buzzer | *2 | Power Back Door Unit Assembly LH |
| *3 | Touch Sensor LH (Power Back Door Sensor Assembly LH) | *4 | Door Control Switch Assembly |
| *5 | Back Door Lock Assembly | *6 | Power Back Door ECU (Multiplex Network Door ECU) |
| | | | |

| | | | |
|---|---|---|---|
| *7 | Back Door Buzzer | *8 | Touch Sensor RH (Power Back Door Sensor Assembly RH) |
| *9 | Power Back Door Unit Assembly RH | *10 | Door Control Receiver |
| *11 | Back Door Opener Switch Assembly | *12 | Power Back Door Button |
| *13 | Electrical Key Transmitter Sub-assembly | - | - |

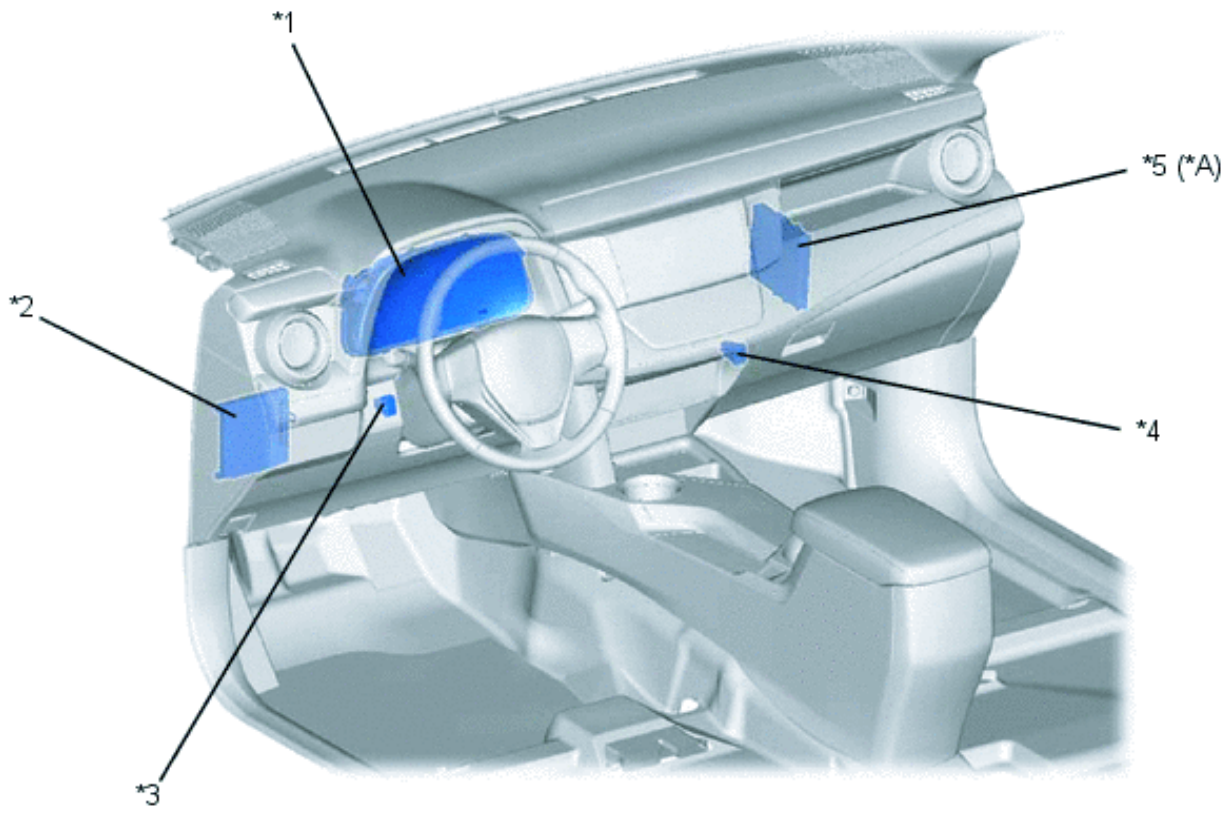


Y

| | | | |
|---|---|---|---|
| *A | Models with Smart Key System | - | - |
| *1 | Combination Meter Assembly | *2 | Main Body ECU (Multiplex Network Body ECU) |
| *3 | Back Door Control Switch | *4 | PWR DOOR OFF Switch (Power Back Door Main Switch) |
| *5 | Certification ECU (Smart Key ECU Assembly) | - | - |