| | | |
|---|---|---|
| **Last Modified:** 03-12-2013 | 6.4 F | **Doc ID:** NM1000000005FYX |
| **Model Year:** 2013 | **Model:** RAV4 | **Prod Date Range:** [12/2012 - ] |
| **Title:** DOOR LOCK: POWER DOOR LOCK CONTROL SYSTEM: SYSTEM DIAGRAM; 2013 MY RAV4 [12/2012 - ] | | |

# SYSTEM DIAGRAM

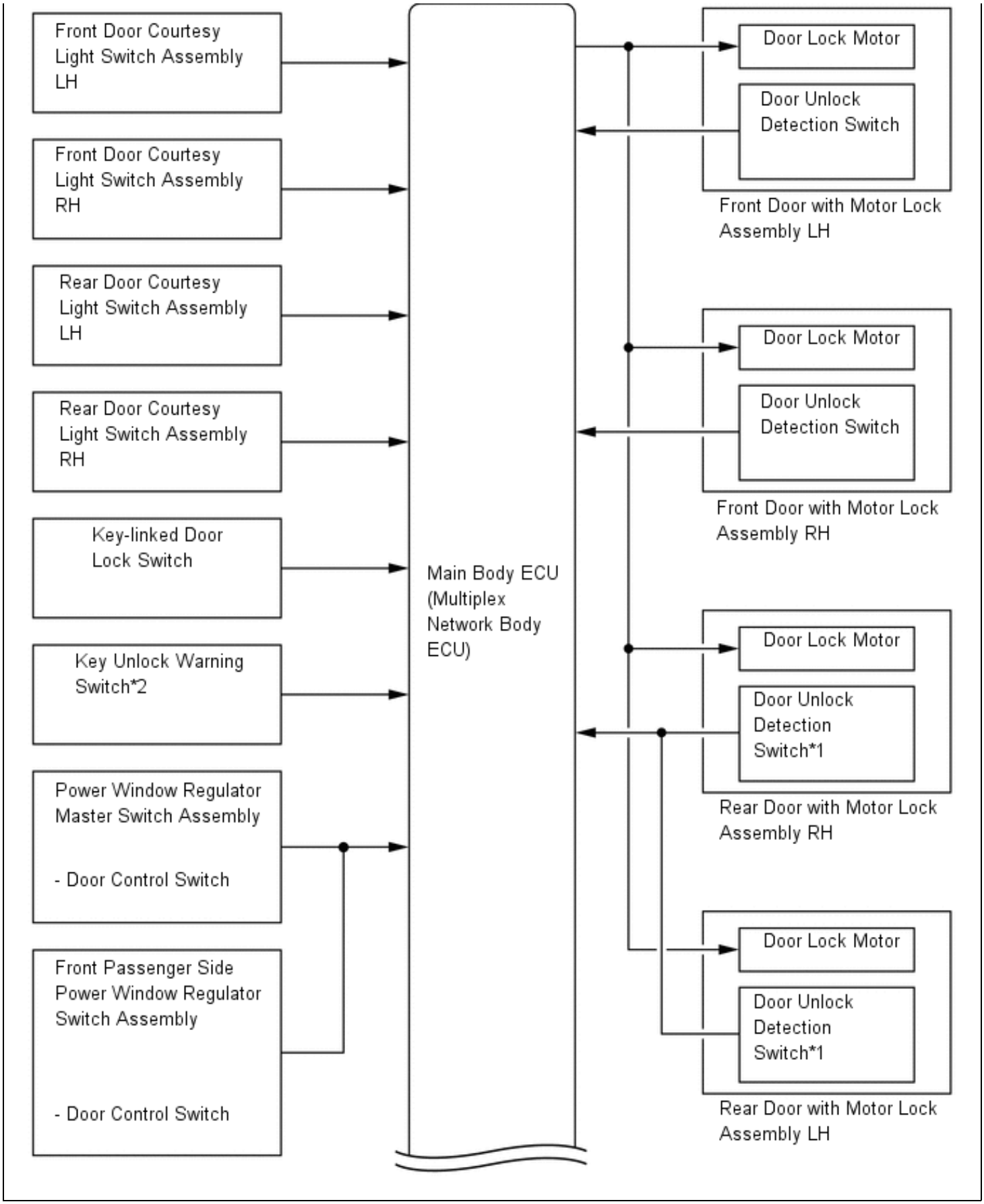
Front Door Courtesy Light Switch Assembly LH
Front Door Courtesy Light Switch Assembly RH
Rear Door Courtesy Light Switch Assembly LH
Rear Door Courtesy Light Switch Assembly RH
Key-linked Door Lock Switch
Key Unlock Warning Switch*2
Power Window Regulator Master Switch Assembly
- Door Control Switch
Front Passenger Side Power Window Regulator Switch Assembly
- Door Control Switch
Main Body ECU (Multiplex Network Body ECU)
Door Lock Motor
Door Unlock Detection Switch
Front Door with Motor Lock Assembly LH
Door Lock Motor
Door Unlock Detection Switch
Front Door with Motor Lock Assembly RH
Door Lock Motor
Door Unlock Detection Switch*1
Rear Door with Motor Lock Assembly RH
Door Lock Motor
Door Unlock Detection Switch*1
Rear Door with Motor Lock Assembly LH

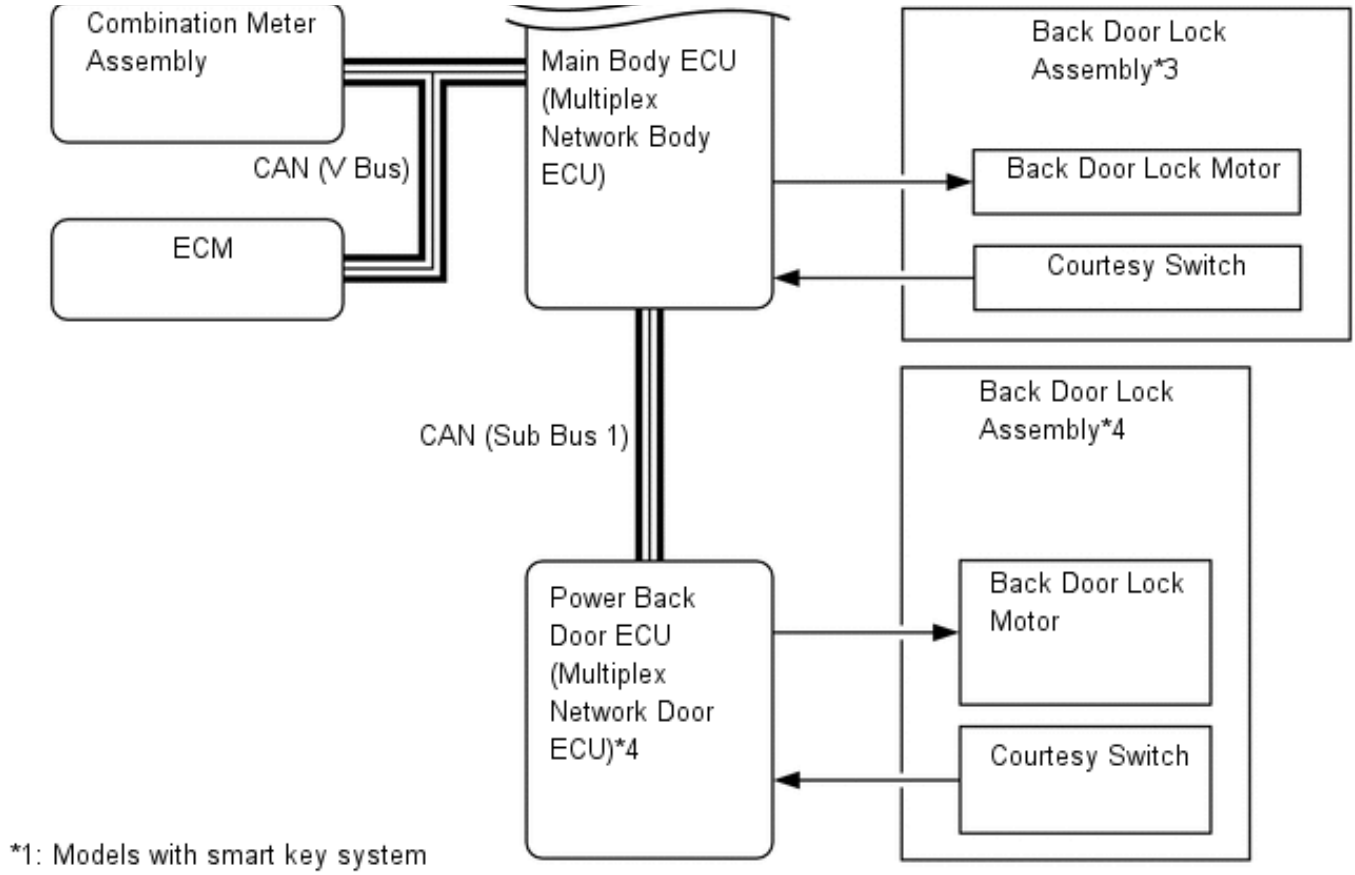


*1: Models with smart key system

*2: Models without smart key system

*3: Models without power back door system

*4: Models with power back door system