| | | |
|---|---|---|
| **Last Modified:** 03-12-2013 | 6.4 F | **Doc ID:** NM1000000004IDP |
| **Model Year:** 2013 | **Model:** RAV4 | **Prod Date Range:** [12/2012 - ] |
| **Title:** AUDIO / VIDEO: AUDIO AND VISUAL SYSTEM: STEERING PAD SWITCH; 2013 MY RAV4 [12/2012 - ] | | |

# STEERING PAD SWITCH

## 1. CONSTRUCTION

(a) Frequently used switches are located on the steering pad for easy use.

(b) The steering pad switches provided on the steering pad may vary in accordance with optional equipment.

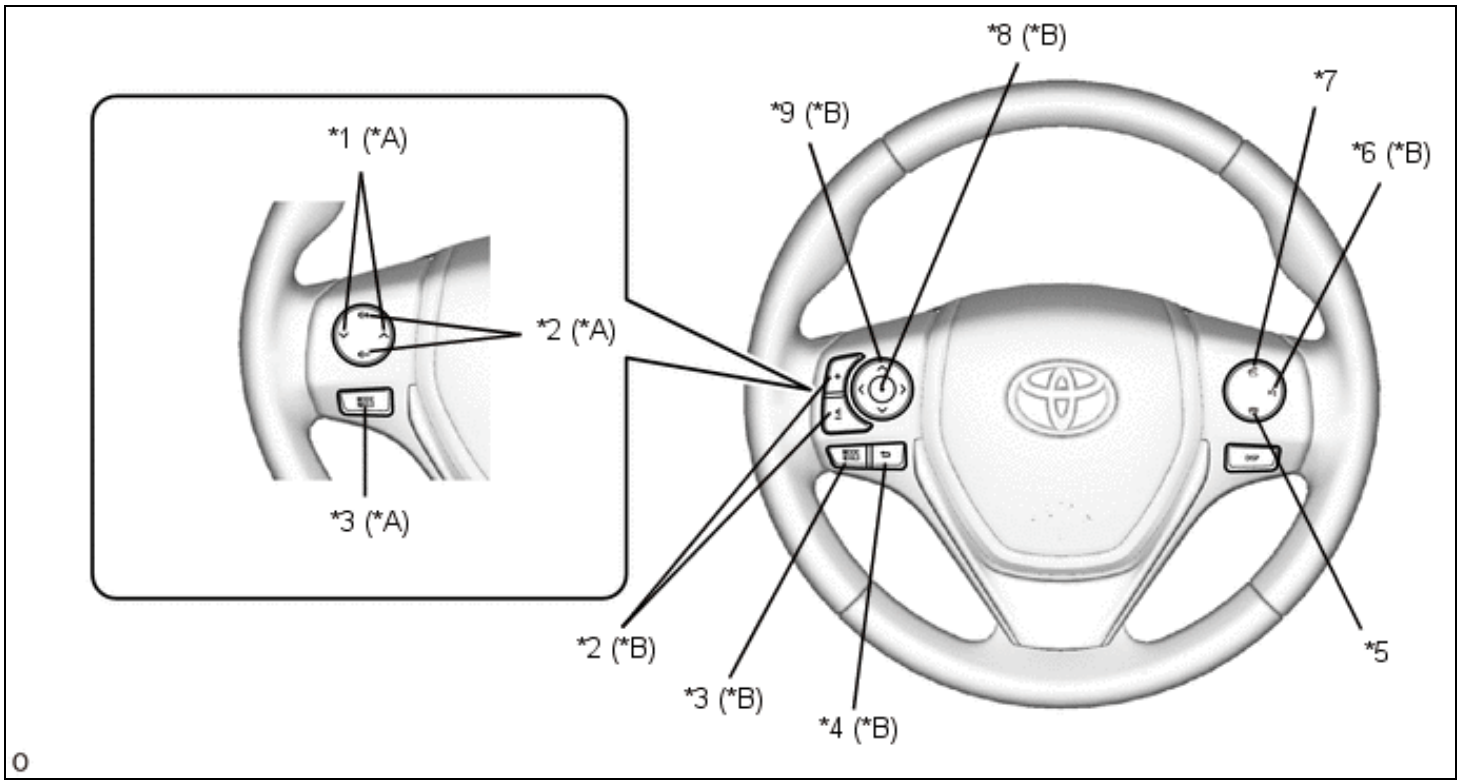


| | | | |
|---|---|---|---|
| *A | Models with Radio Receiver Assembly | *B | Models without Radio Receiver Assembly |
| *1 | Seek Switch | *2 | Volume Switch |
| *3 | Mode Switch | *4 | Back Switch |
| *5 | On-hook Switch | *6 | Voice Switch |
| *7 | Off-hook Switch | *8 | Enter Switch |
| *9 | Cursor Switch | - | - |