| | | |
|---|---|---|
| **Last Modified:** 03-12-2013 | 6.4 F | **Doc ID:** NM1000000005H36 |
| **Model Year:** 2013 | **Model:** RAV4 | **Prod Date Range:** [12/2012 - ] |
| **Title:** EXTERIOR PANELS / TRIM: BODY STRUCTURE: SOUND ABSORBING AND VIBRATION DAMPING MATERIAL; 2013 MY RAV4 [12/2012 - ] | | |

# SOUND ABSORBING AND VIBRATION DAMPING MATERIAL

### 1. CONSTRUCTION

(a) A hood insulator is provided on the rear of the hood sub-assembly. This achieves excellent sound insulation performance.

(b) An cowl top panel insulator No. 1 is provided for the cowl top panel outer FR, thus aiming forreduction of noise intrusion from the engine compartment into the cabin.

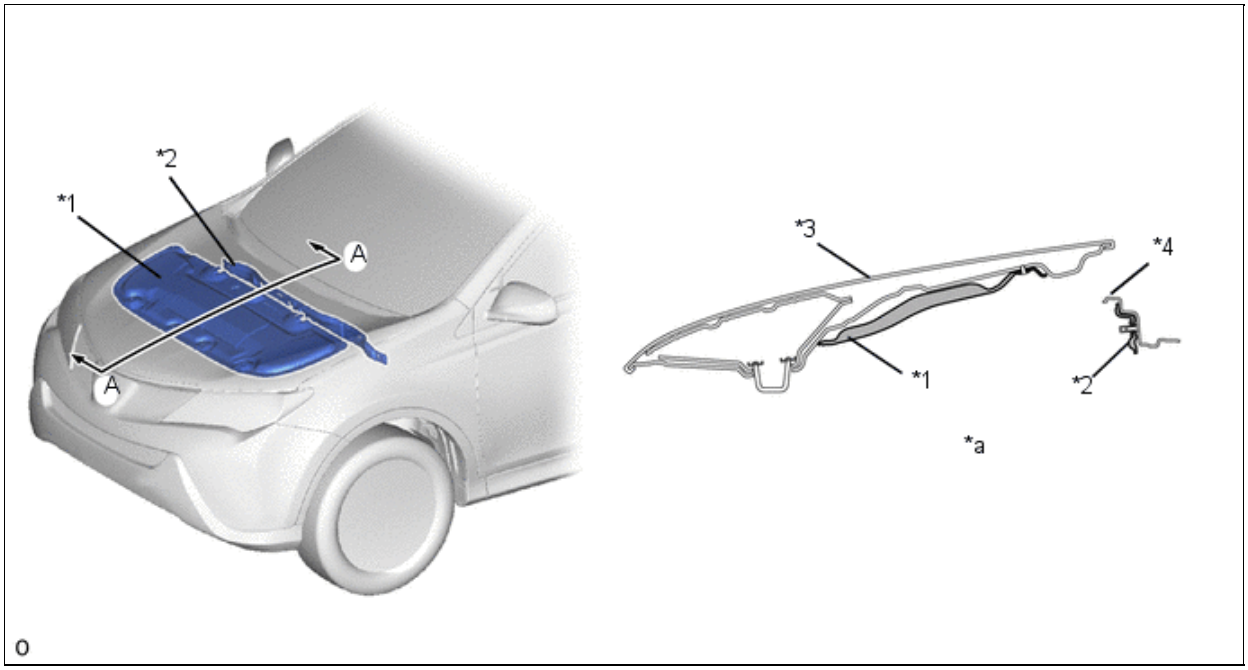


| | | | |
|---|---|---|---|
| *1 | Hood Insulator | *2 | Cowl Top Panel Insulator No. 1 |
| *3 | Hood Sub-assembly | *4 | Cowl Top Panel Outer FR |
| *a | A - A Cross Section | - | - |

(c) Noise absorbing material is provided for the front fender liner, thus reducing sound created by flying sand, flying water and road noise.

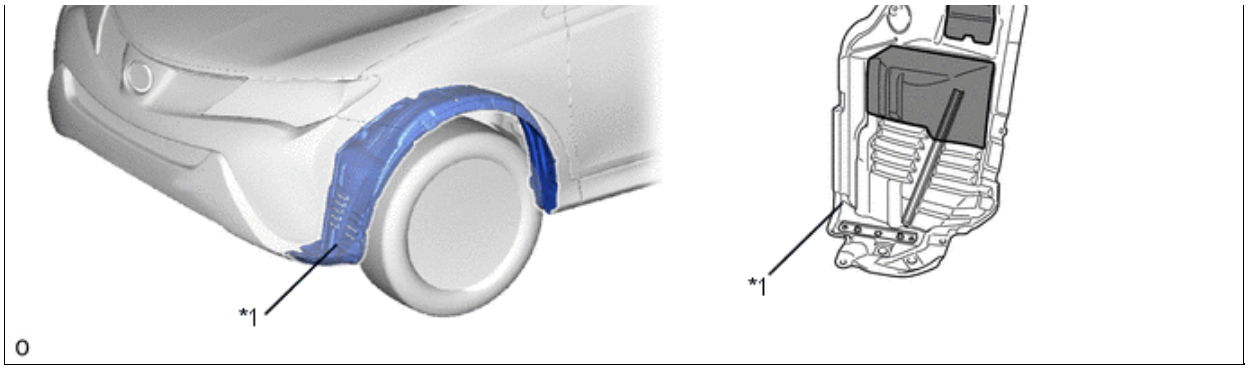


| | | | |
|---|---|---|---|
| *1 | Front Fender Liner | - | - |
| | Noise Absorbing Material | - | - |

(d) A dash panel insulator outer is provided. This reduces the amount of engine noise leaking into and out of the cabin.

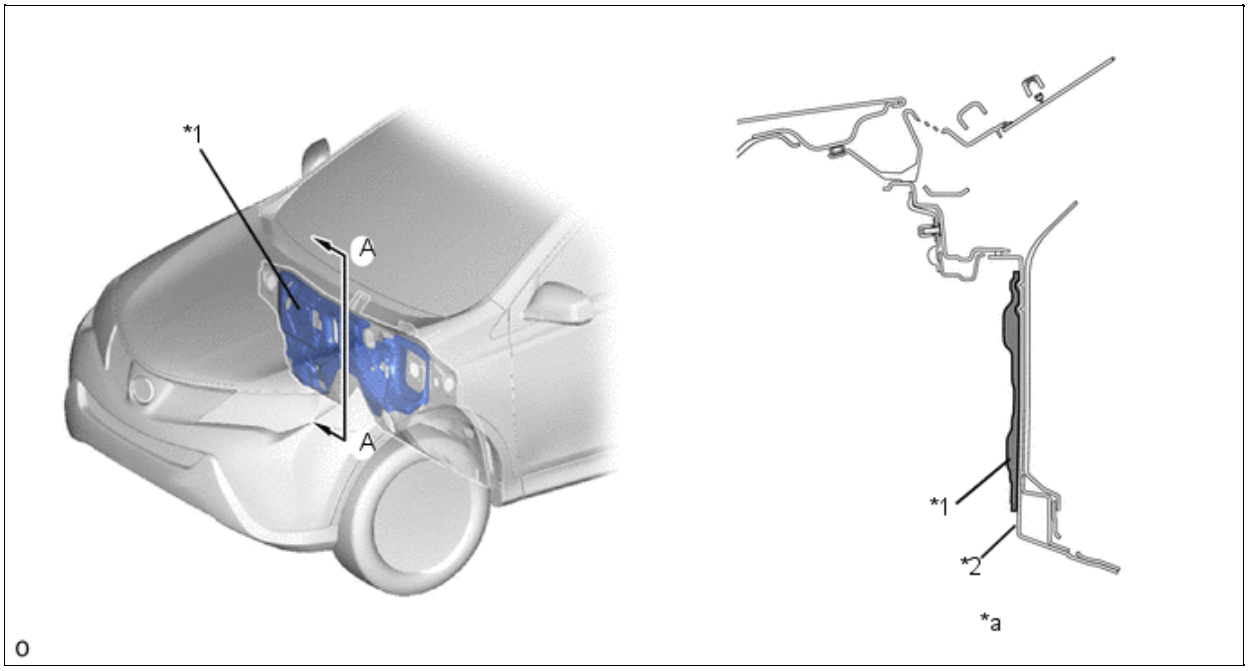


| | | | |
|---|---|---|---|
| *1 | Dash Panel Insulator Outer | *2 | Dash Panel Sub-assembly |
| *a | A - A Cross Section | - | - |

(e) A dash panel insulator assembly is provided. This insulates and absorbs the engine noise to reduce the amount of engine noise leaking into the cabin:

(1) The following features have been given to achieve a superior sound absorption and insulation performance.

- The side of the cowl has been enlarged (improved sound absorption and insulation performance).
- The holes in the dash panel insulator assembly have been filled (improved sound absorption and insulation performance).
- Insulation material has been added to the lower portion of the dash panel insulator assembly (improved sound absorption and insulation performance).

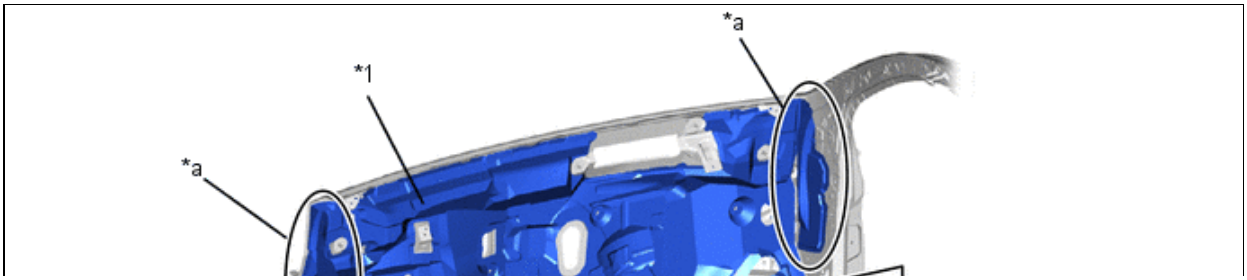

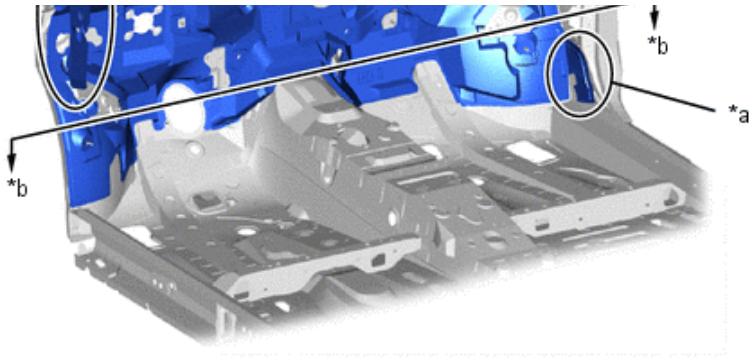


| | | | |
|---|---|---|---|
| *1 | Dash Panel Insulator Assembly | - | - |
| *a | Side of Cowl | *b | Lower Portion of Dash Panel Insulator Assembly |

(f) An acoustic insulating material is provided in the periphery of the rear portion of the vehicle, thus reducing the sound created by sand, water and road noise.

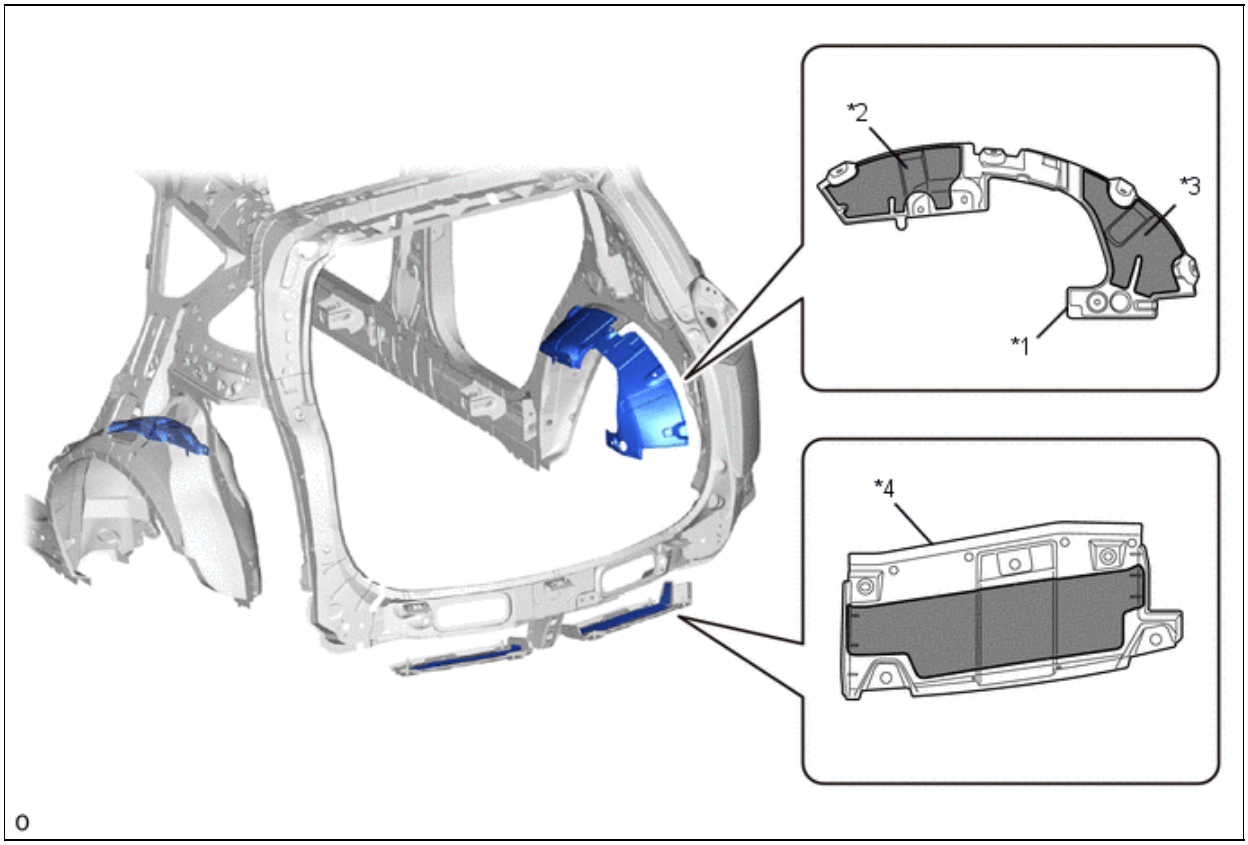


| | | | |
|---|---|---|---|
| *1 | Quarter Wheel House Insulator RH | *2 | Quarter Wheel House Inner Silencer Sheet |

| | | | |
|---|---|---|---|
| *3 | Rear Wheel House Silencer Sheet No. 2 | *4 | Luggage Compartment Service Cover Protector No. 1 |
| | Noise Absorbing Material | - | - |

(g) A front door weatherstrip No.2 is provided on the lower portion of the rocker. This prevents road noise from entering the cabin, and achieves superior quietness.

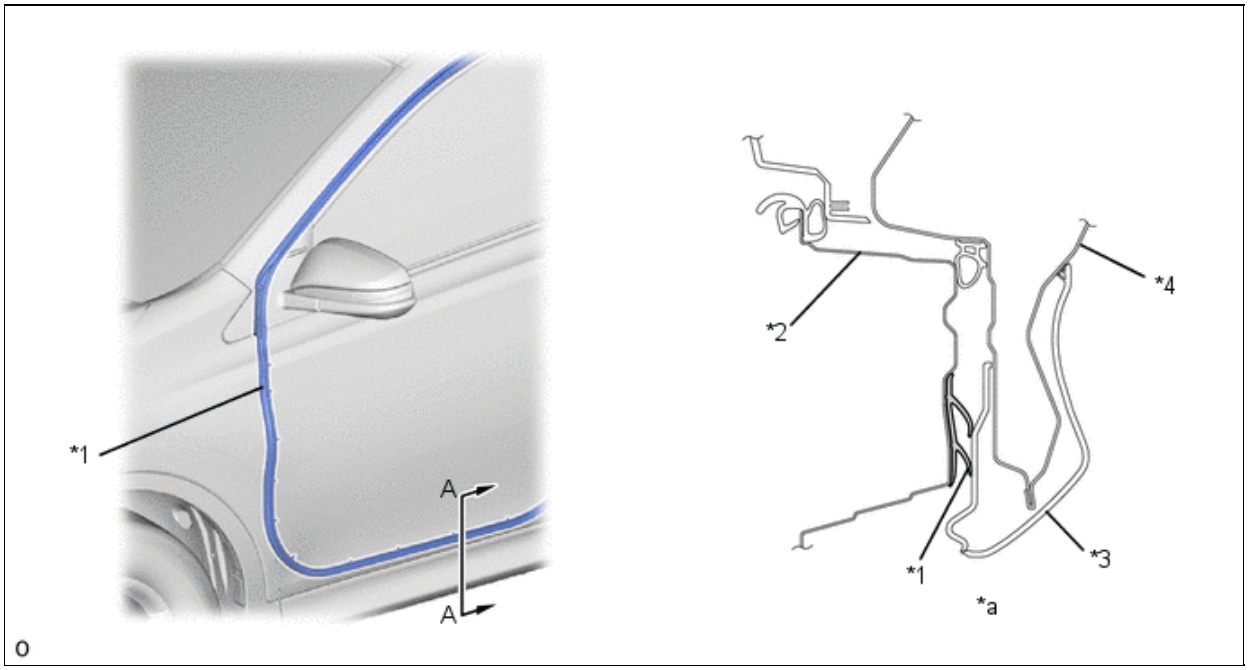


| | | | |
|---|---|---|---|
| *1 | Front Door Weatherstrip No. 2 | *2 | Side Panel Outer |
| *3 | Front Door Molding Sub-assembly Outside Lower | *4 | Front Door Panel Outer |
| *a | A - A Cross Section | - | - |

(h) To reduce the amount of road noise, engine noise and droning sound that enters the cabin, the floor panel is coated with a floor silencer.

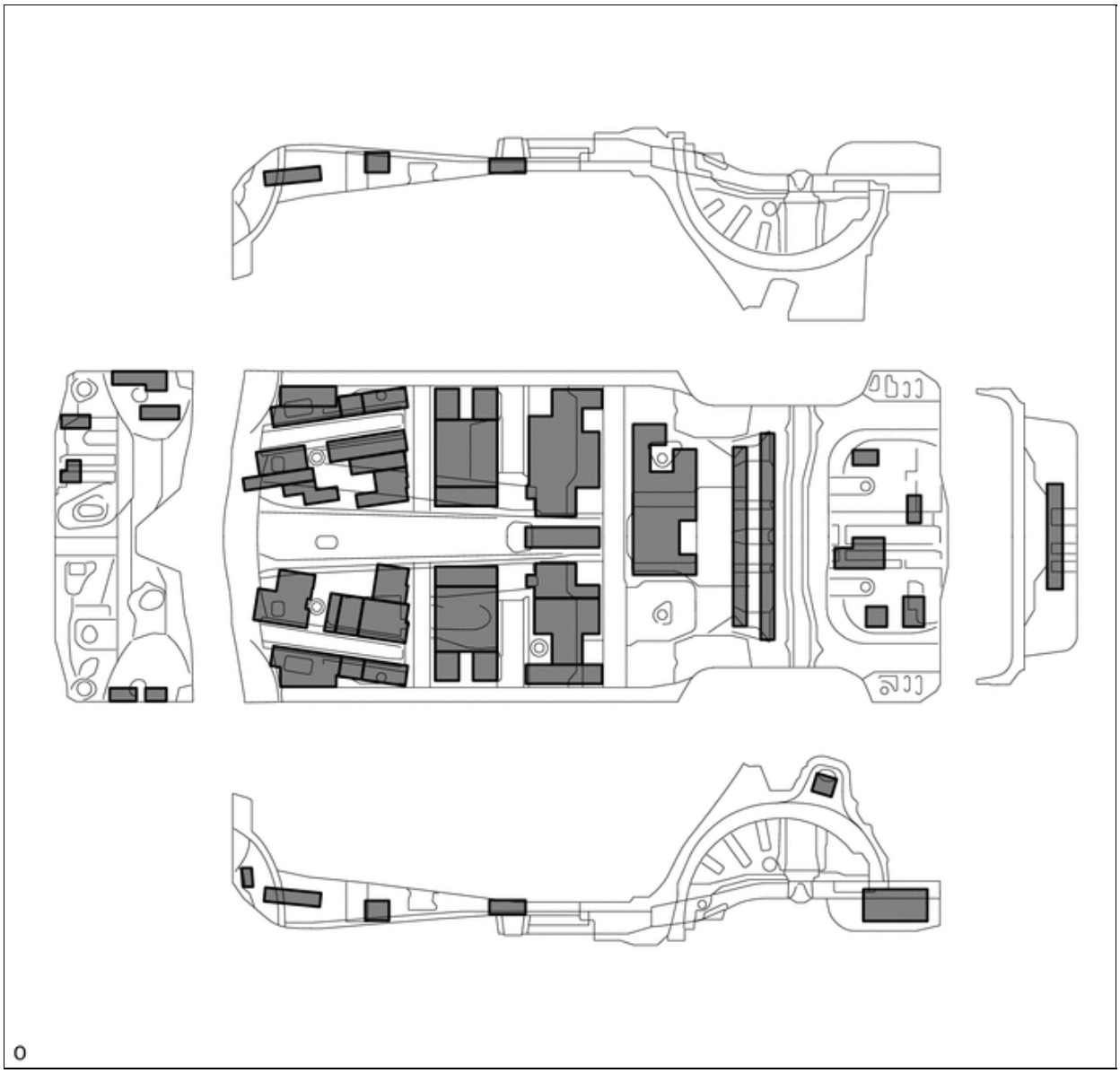


| | | | |
|---|---|---|---|
| | Floor Silencer | - | - |

(i) Sound insulation materials are used in the body frame profile, thus dampening various noises which intrude from the outside of the vehicle to the inside of the cabin.

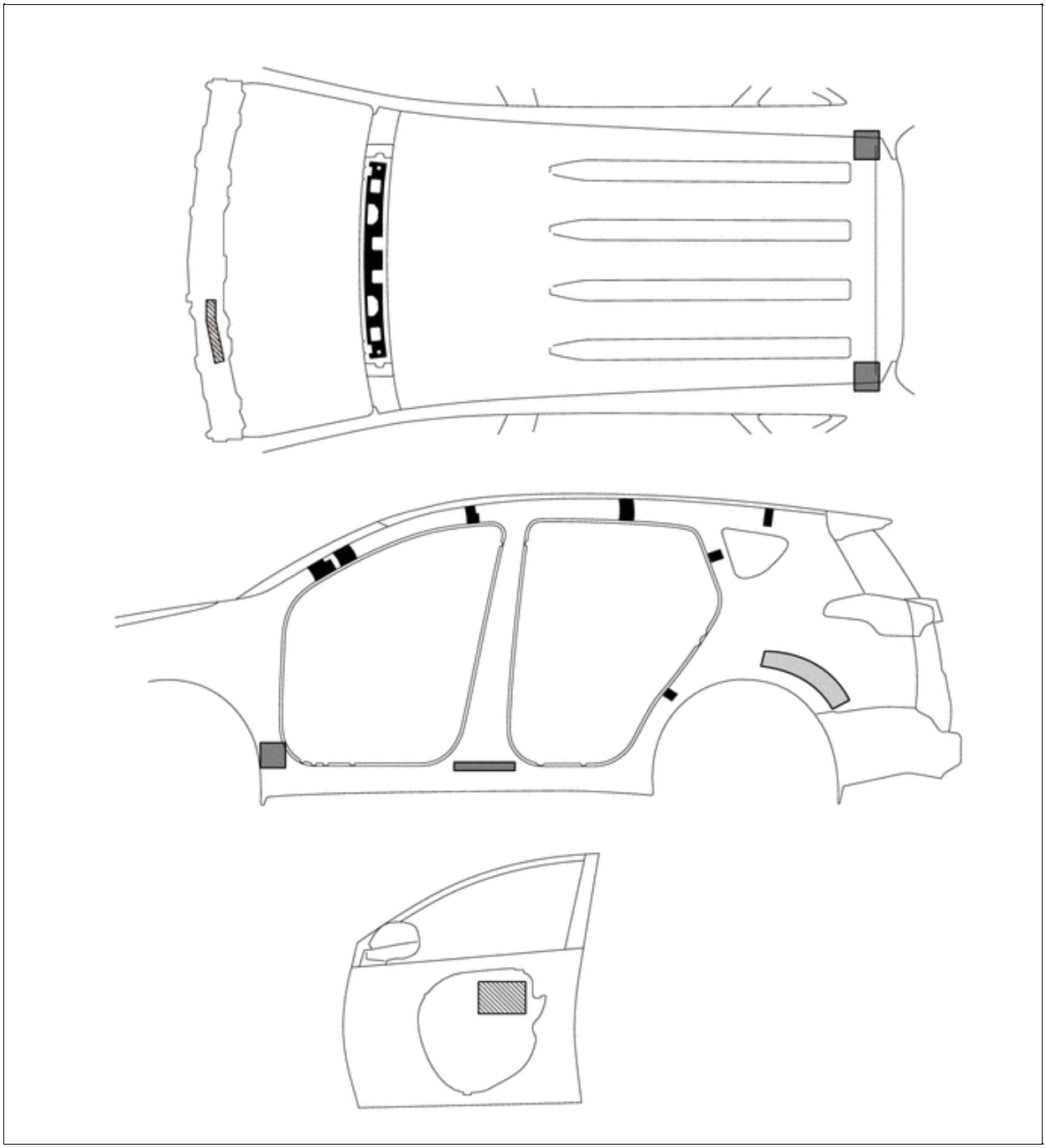

| | | | |
|---|---|---|---|
| | Foaming Sealer | | Polyurethane Form |
| | Silencer Pad | | Dump Sheet |

(j) All the locations of acoustic insulating materials (sound insulation and absorption materials) in the cabin and luggage space have

been optimized, thus creating a quiet drive.

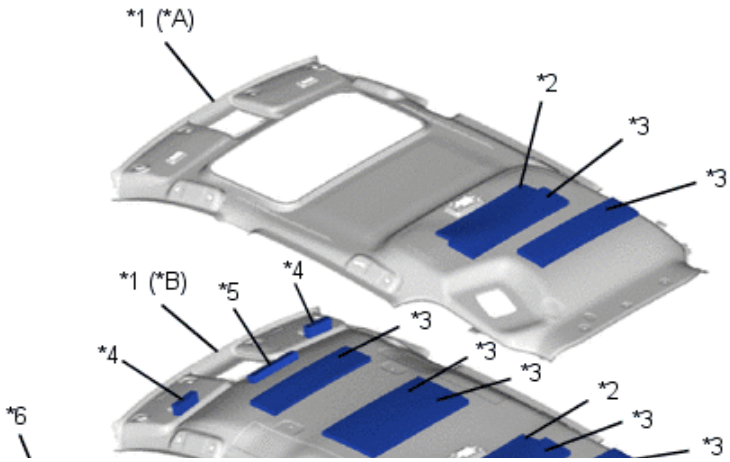

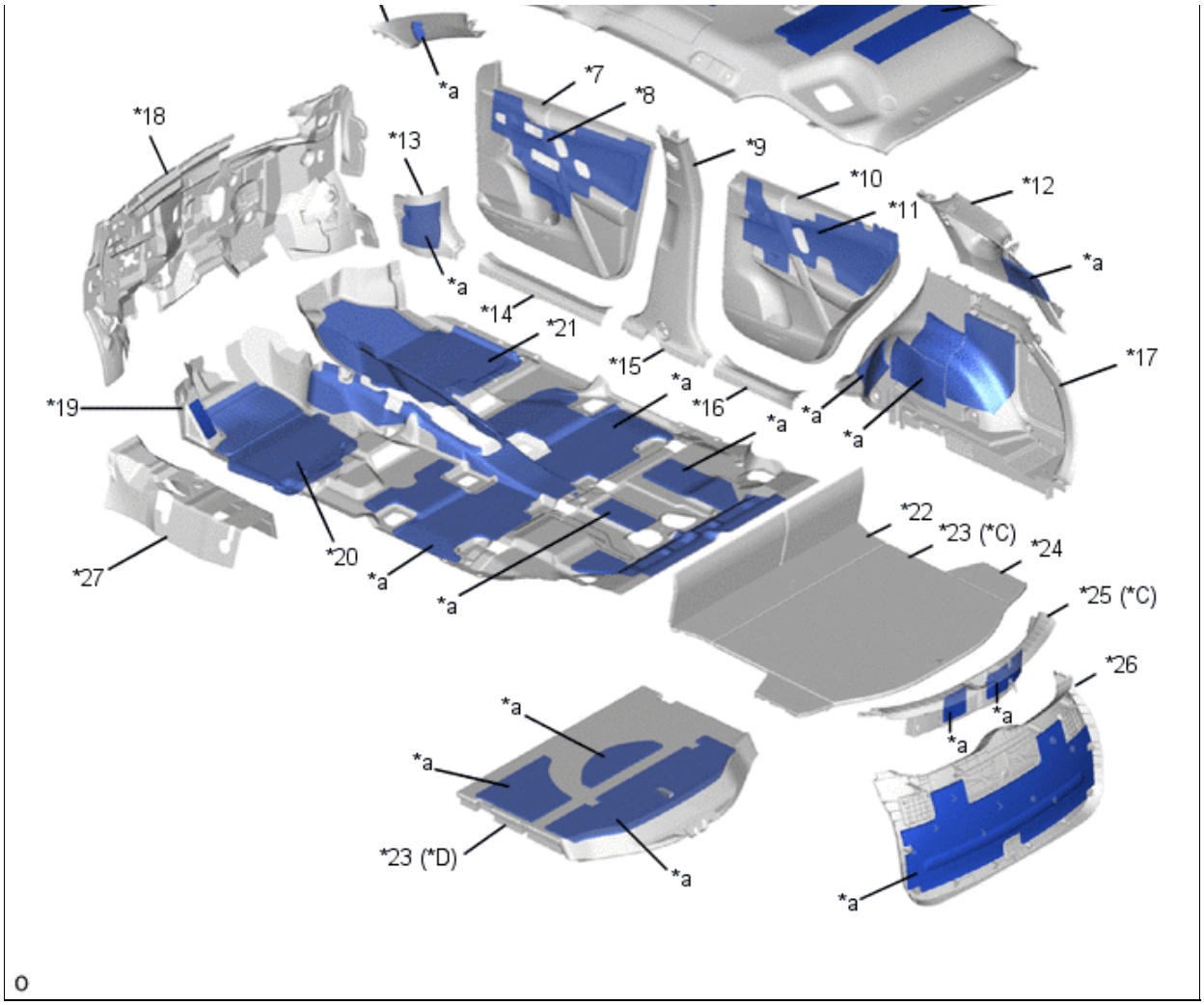


| | | | |
|---|---|---|---|
| *A | Models with Sliding Roof | *B | Models with Normal Roof |
| *C | Models with Compact Spare Tire | *D | Models with Full Size Spare Tire |
| *1 | Roof Headlining Assembly | *2 | Roof Silencer Pad No. 3 |
| *3 | Roof Silencer Pad No. 1 | *4 | Roof Headlining Pad |
| *5 | Roof Headlining Pad No. 2 | *6 | Front Pillar Garnish |
| *7 | Front Door Trim Board Sub-assembly | *8 | Front Door Silencer Pad |
| *9 | Center Pillar Garnish RH | *10 | Rear Door Trim Board Sub-assembly |
| *11 | Rear Door Silencer Pad | *12 | Roof Side Garnish Assembly Inner RH |
| *13 | Cowl Side Trim Board RH | *14 | Front Door Scuff Plate Inside RH |
| *15 | Center Pillar Garnish Lower RH | *16 | Rear Door Scuff Plate RH |
| *17 | Deck Trim Side Panel Assembly RH | *18 | Dash Panel Insulator Assembly |
| *19 | Front Floor Carpet Assembly Front | *20 | Front Floor Silencer No. 3 |
| *21 | Front Floor Silencer No. 1 | *22 | Rear Floor Board No. 1 |
| *23 | Deck Board Assembly | *24 | Rear Floor Board No. 2 |
| *25 | Rear Floor Finish Plate | *26 | Back Door Trim Board Assembly |
| *27 | Floor Mat Front Center | - | - |
| *a | Acoustic Insulating Material | - | - |

(k) An acoustic layer laminated windshield glass is provided to reduce the engine noise and road noise intrusion into the cabin.

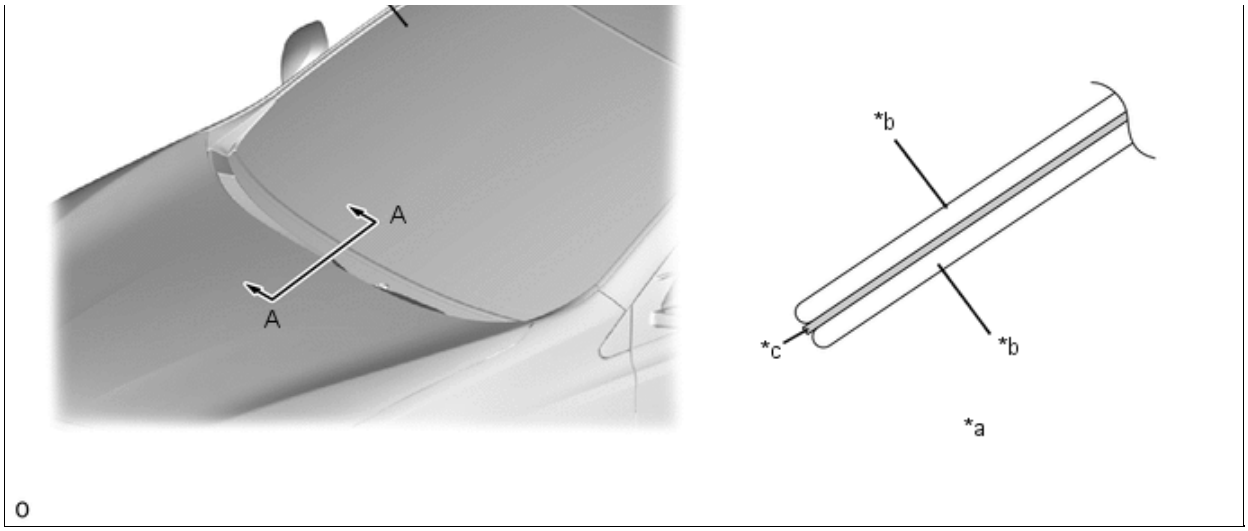


| | | | |
|---|---|---|---|
| *1 | Windshield Glass | - | - |
| *a | A - A Cross Section | *b | Glass |
| *c | Acoustic Layer | - | - |

(l) A fin shape has been added to both sides of the roof wind deflector panel sub-assembly in the sliding roof housing sub-assembly. This prevents the airflow surrounding the roof wind deflector panel subassembly to enter the cabin, thus suppressing wind noise.

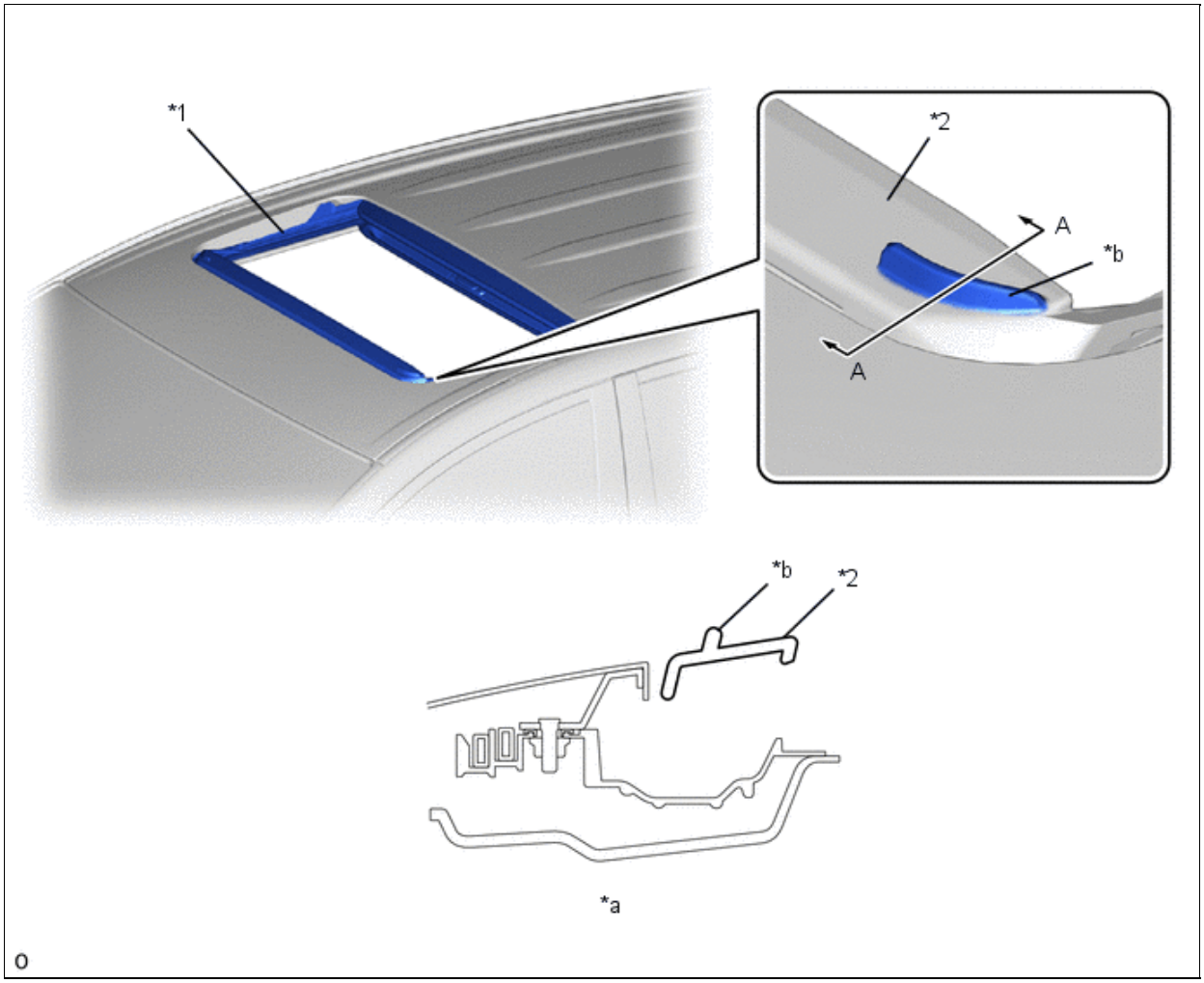


| | | | |
|---|---|---|---|
| *1 | Sliding Roof Housing Sub-assembly | *2 | Roof Wind Deflector Panel Sub-assembly |
| *a | A - A Cross Section | *b | Fin Shape |

| | | | |
|---|---|---|---|
| **a | A - A Cross Section | **b | Fin Shape |