| | | |
|---|---|---|
| **Last Modified:** 03-12-2013 | 6.4 F | **Doc ID:** NM1000000005IHQ |
| **Model Year:** 2013 | **Model:** RAV4 | **Prod Date Range:** [12/2012 - ] |
| **Title:** LIGHTING (INT): LIGHTING SYSTEM: PARTS LOCATION; 2013 MY RAV4 [12/2012 - ] | | |

# PARTS LOCATION

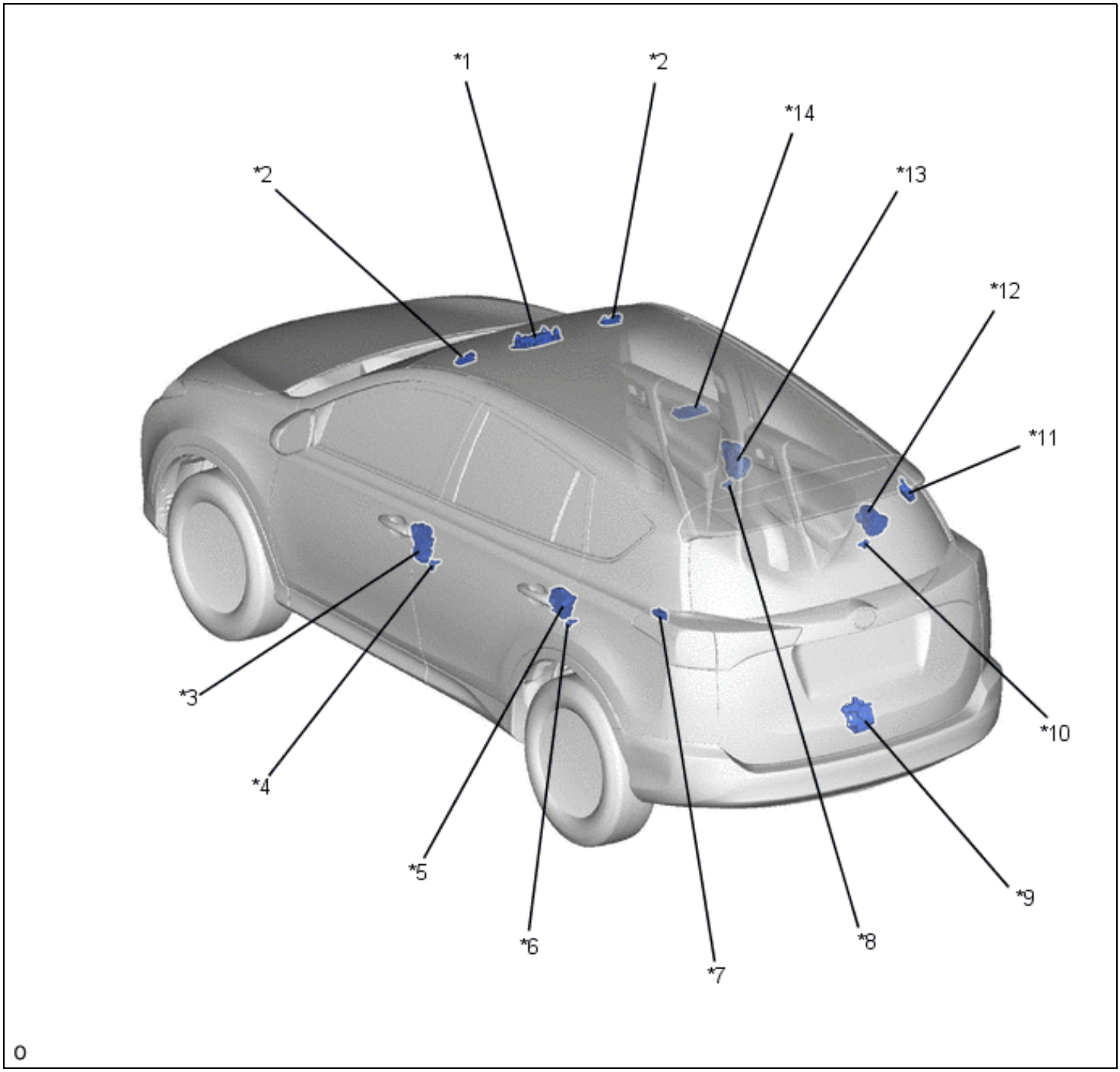


| | | | |
|---|---|---|---|
| *1 | Map Light Assembly (Front Room Light) | *2 | Vanity Light Assembly |
| *3 | Front Door Lock Assembly LH | *4 | Front Door Courtesy Light Switch Assembly LH |
| *5 | Rear Door Lock Assembly LH | *6 | Rear Door Courtesy Light Switch Assembly LH |

| | | | |
|---|---|---|---|
| *7 | No. 2 Room Light Assembly | *8 | Front Door Courtesy Light Switch Assembly RH |
| *9 | Back Door Lock Assembly<br>• Back Door Courtesy Light Switch | *10 | Rear Door Courtesy Light Switch Assembly RH |
| *11 | Door Control Receiver | *12 | Rear Door Lock Assembly RH |
| *13 | Front Door Lock Assembly RH | *14 | No. 1 Room Light Assembly (Rear Room Light) |

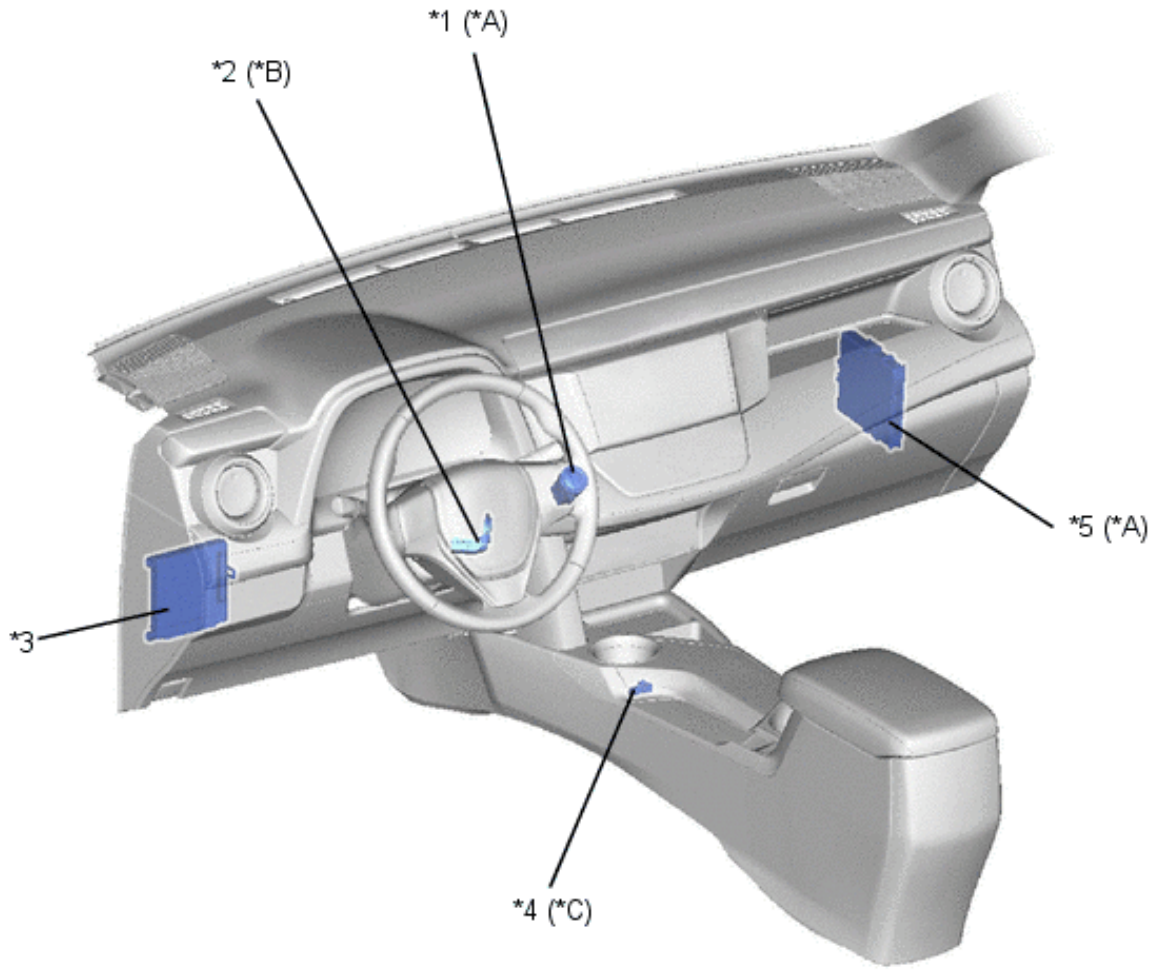


| | | | |
|---|---|---|---|
| *A | Models with Smart Key System | *B | Models without Smart Key System |
| *C | Models with Cup Holder Illumination | - | - |

| | | | |
|---|---|---|---|
| *1 | Engine Switch (Push Start Switch) | *2 | Transponder Key Coil<br>• Ignition Key Ring Illumination |
| *3 | Main Body ECU (Multiplex Network Body ECU) | *4 | Cup Holder Illumination |
| *5 | Certification ECU (Smart Key ECU Assembly) | - | - |