| | | |
|---|---|---|
| **Last Modified:** 03-12-2013 | 6.4 F | **Doc ID:** NM1000000005G0H |
| **Model Year:** 2013 | **Model:** RAV4 | **Prod Date Range:** [12/2012 - ] |
| **Title:** NETWORKING: CAN COMMUNICATION SYSTEM: PARTS LOCATION; 2013 MY RAV4 [12/2012 - ] | | |

# PARTS LOCATION

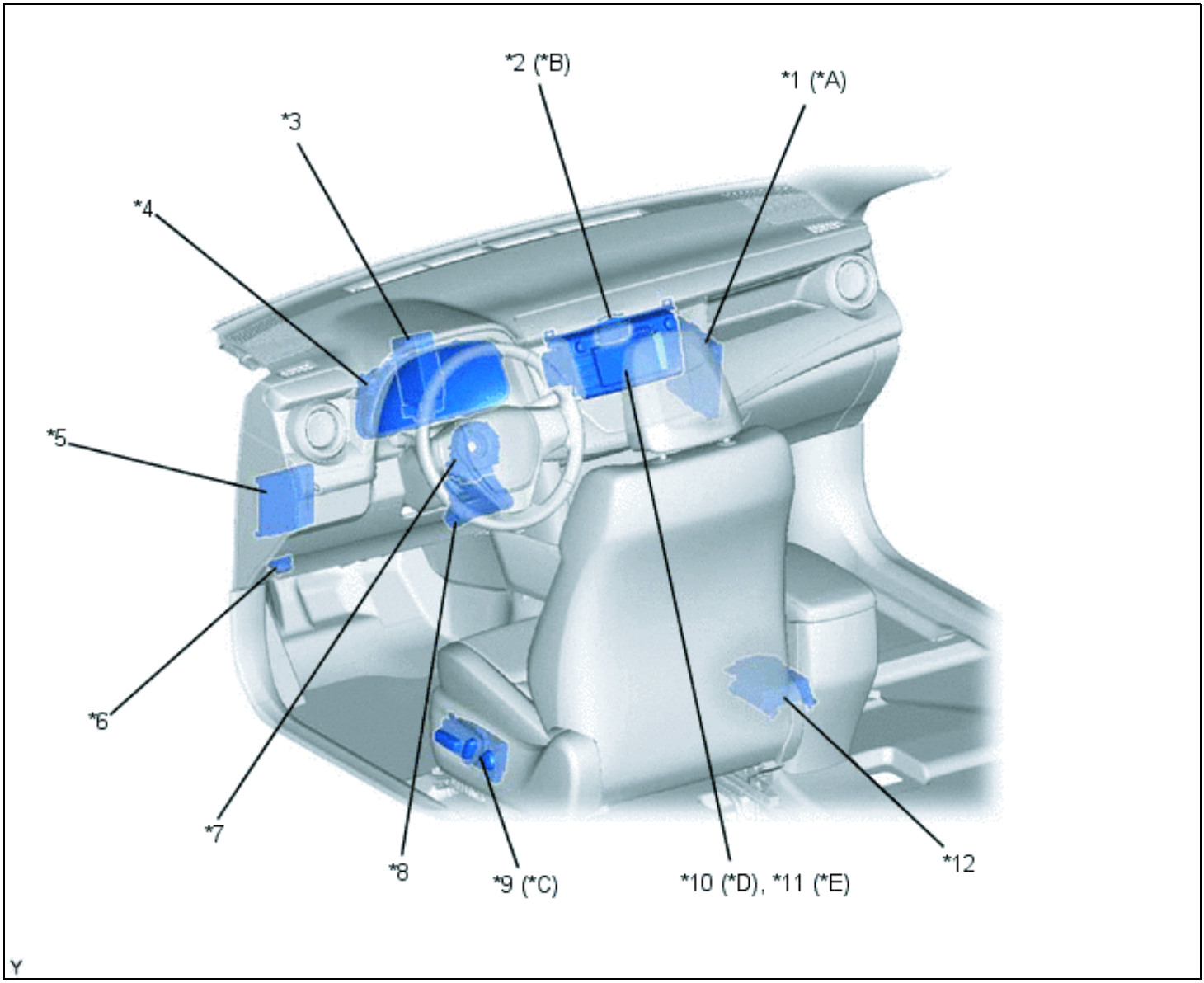


| | | | |
|---|---|---|---|
| *A | Models with Smart Key System | *B | AWD Models |
| *C | Models with Memory Function | *D | Models with Radio and Display Receiver Assembly |
| *E | Models with HDD Navigation Receiver Assembly | - | - |
| *1 | Certification ECU (Smart Key ECU Assembly) | *2 | 4WD ECU Assembly |
| *3 | Power Steering ECU Assembly | *4 | Combination Meter Assembly |
| *5 | Main Body ECU (Multiplex Network Body ECU) | *6 | DLC3 |

| | | | |
|---|---|---|---|
| *7 | Steering Sensor | *8 | Air Conditioning Amplifier Assembly |
| *9 | Position Control ECU and Switch Assembly | *10 | Radio and Display Receiver Assembly |
| *11 | Navigation Receiver Assembly | *12 | Center Airbag Sensor Assembly |

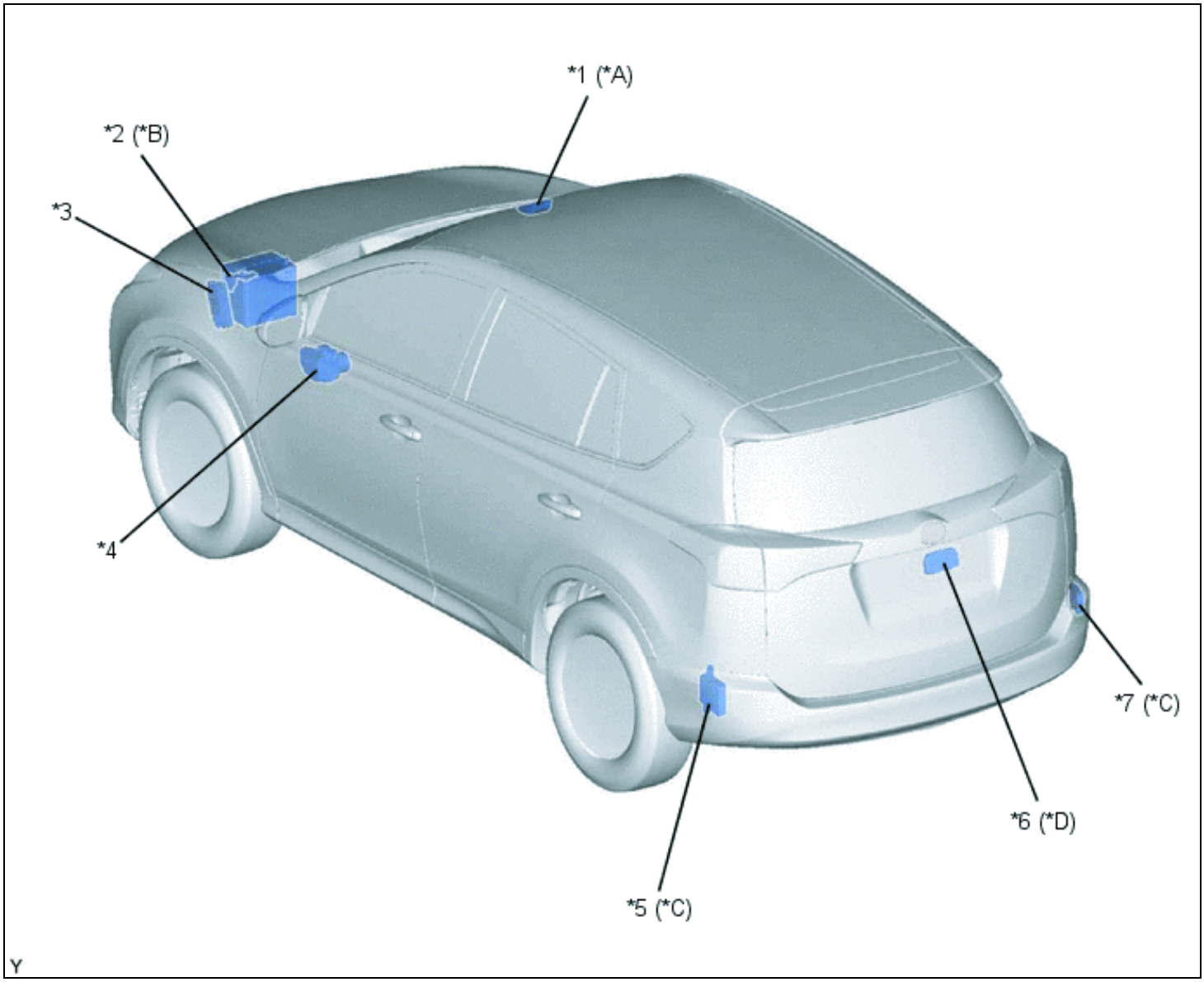


| | | | |
|---|---|---|---|
| *A | Models with Lane Departure Alert System | *B | 2WD Models with 2AR-FE Engine |
| *C | Models with Blind Spot Monitor System | *D | Models with Power Back Door System |
| *1 | Lane Departure Warning Camera | *2 | Generator Control ECU Assembly |
| *3 | ECM | *4 | Skid Control ECU |
| *5 | Blind Spot Monitor Sensor LH | *6 | Power Back Door ECU (Multiplex Network Door ECU) |
| *7 | Blind Spot Monitor Sensor RH | - | - |