| | | |
|---|---|---|
| **Last Modified:** 03-12-2013 | 6.4 F | **Doc ID:** NM1000000005FZ3 |
| **Model Year:** 2013 | **Model:** RAV4 | **Prod Date Range:** [12/2012 - ] |
| **Title:** DOOR LOCK: WIRELESS DOOR LOCK CONTROL SYSTEM: PARTS LOCATION; 2013 MY RAV4 [12/2012 - ] | | |

# PARTS LOCATION

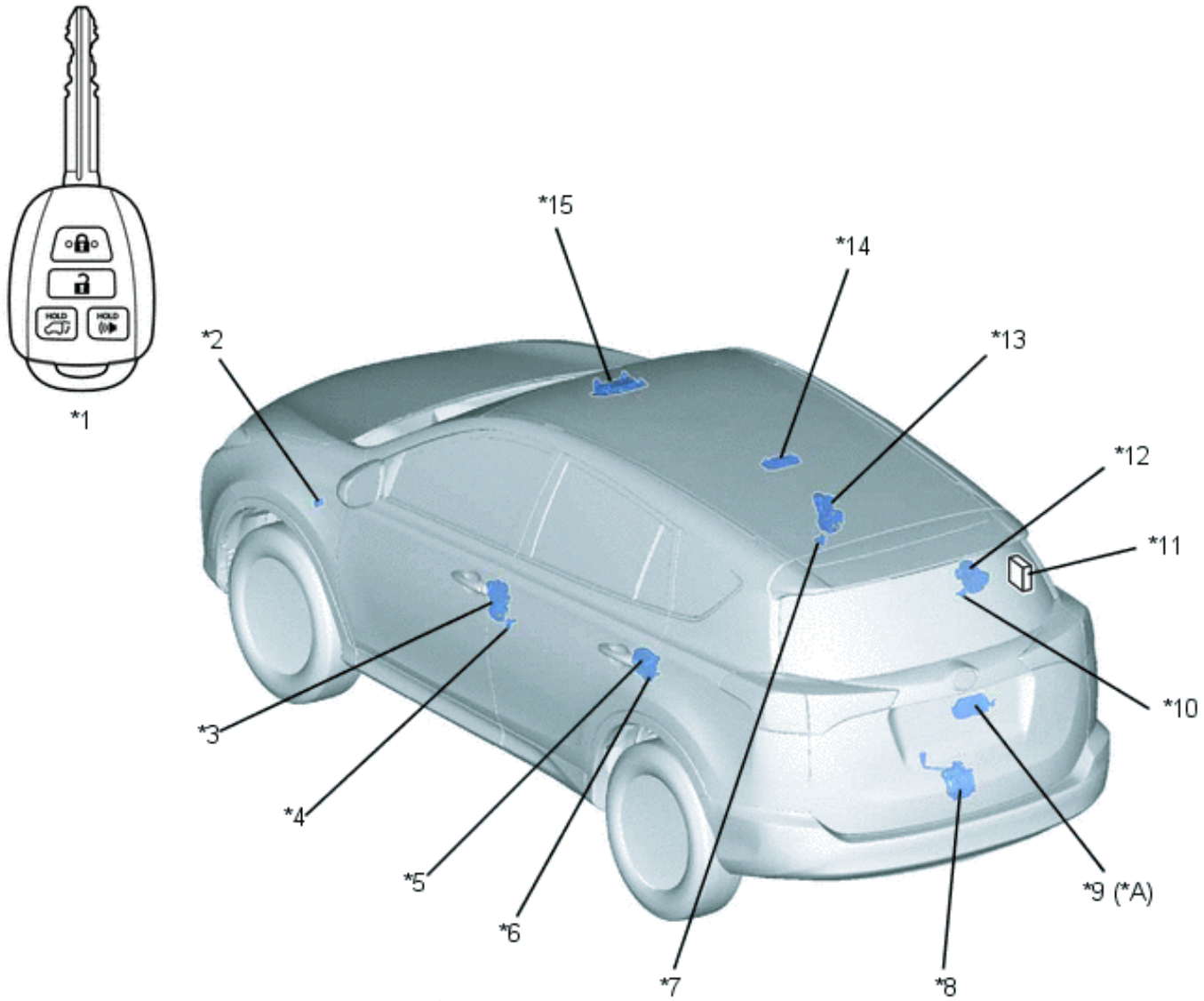


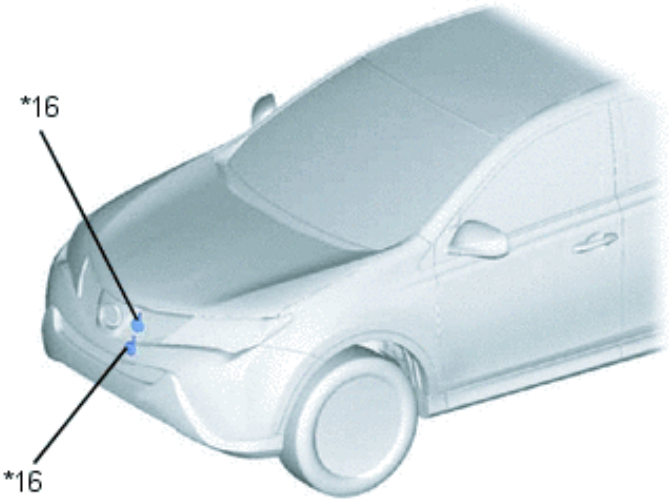


| | | | |
|---|---|---|---|
| *A | Models with Power Back Door System | - | - |
| *1 | Door Control Transmitter Sub-assembly | *2 | Wireless Door Lock Buzzer |

| | | | |
|---|---|---|---|
| *3 | Front Door with Motor Lock Assembly LH | *4 | Front Door Courtesy Light Switch Assembly LH |
| *5 | Rear Door with Motor Lock Assembly LH | *6 | Rear Door Courtesy Light Switch Assembly LH |
| *7 | Front Door Courtesy Light Switch Assembly RH | *8 | Back Door Lock Assembly |
| *9 | Power Back Door ECU (Multiplex Network Door ECU) | *10 | Rear Door Courtesy Light Switch Assembly RH |
| *11 | Door Control Receiver | *12 | Rear Door with Motor Lock Assembly RH |
| *13 | Front Door with Motor Lock Assembly RH | *14 | No. 1 Room Light Assembly |
| *15 | Map Light Assembly | *16 | Vehicle Horn (Horn Assemblies) |

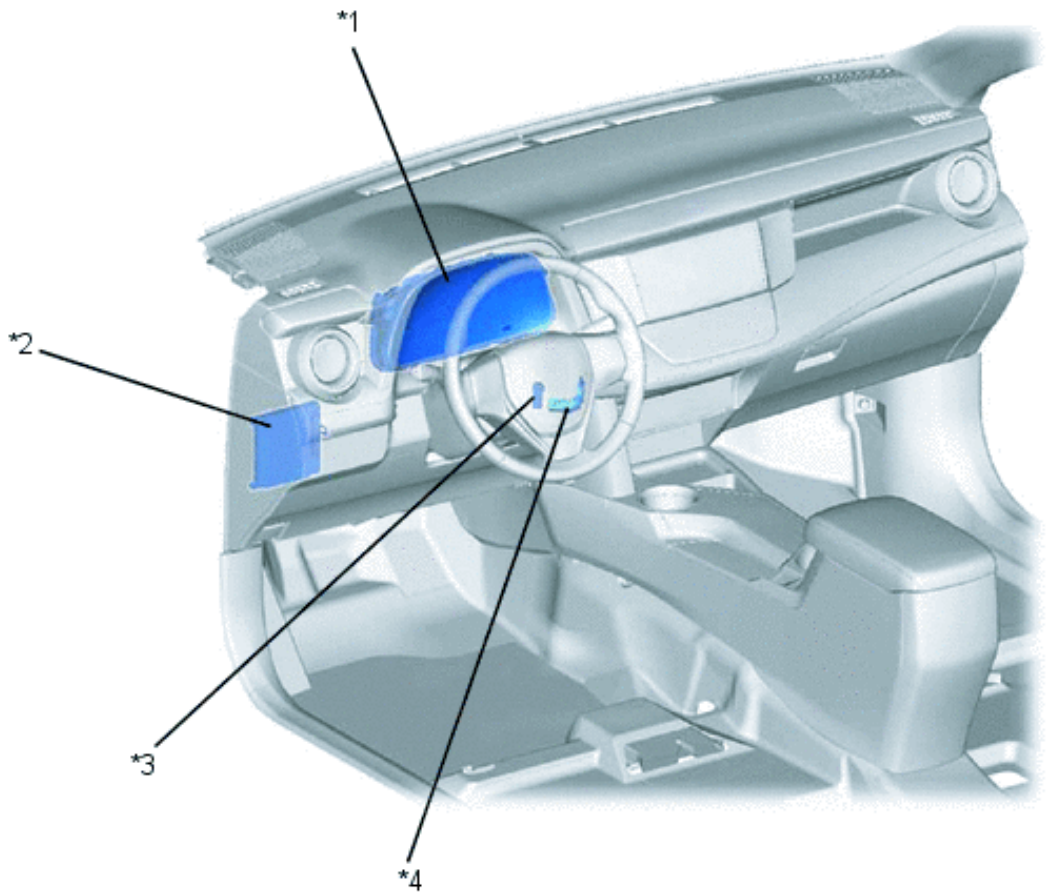


Y

| | | | |
|---|---|---|---|
| *1 | Combination Meter Assembly | *2 | Main Body ECU (Multiplex Network Body ECU) |
| *3 | Key Unlock Warning Switch | *4 | Transponder Key Coil<br>• Ignition Key Ring |

| | | | |
|---|---|---|---|
| | Key Unlock Warning Switch | | Illumination |