| | | |
|---|---|---|
| **Last Modified:** 03-12-2013 | 6.4 F | **Doc ID:** NM1000000005G11 |
| **Model Year:** 2013 | **Model:** RAV4 | **Prod Date Range:** [12/2012 - ] |
| **Title:** WINDOW / GLASS: WINDSHIELD / WINDOW GLASS SYSTEM: PARTS LOCATION; 2013 MY RAV4 [12/2012 - ] | | |

# PARTS LOCATION

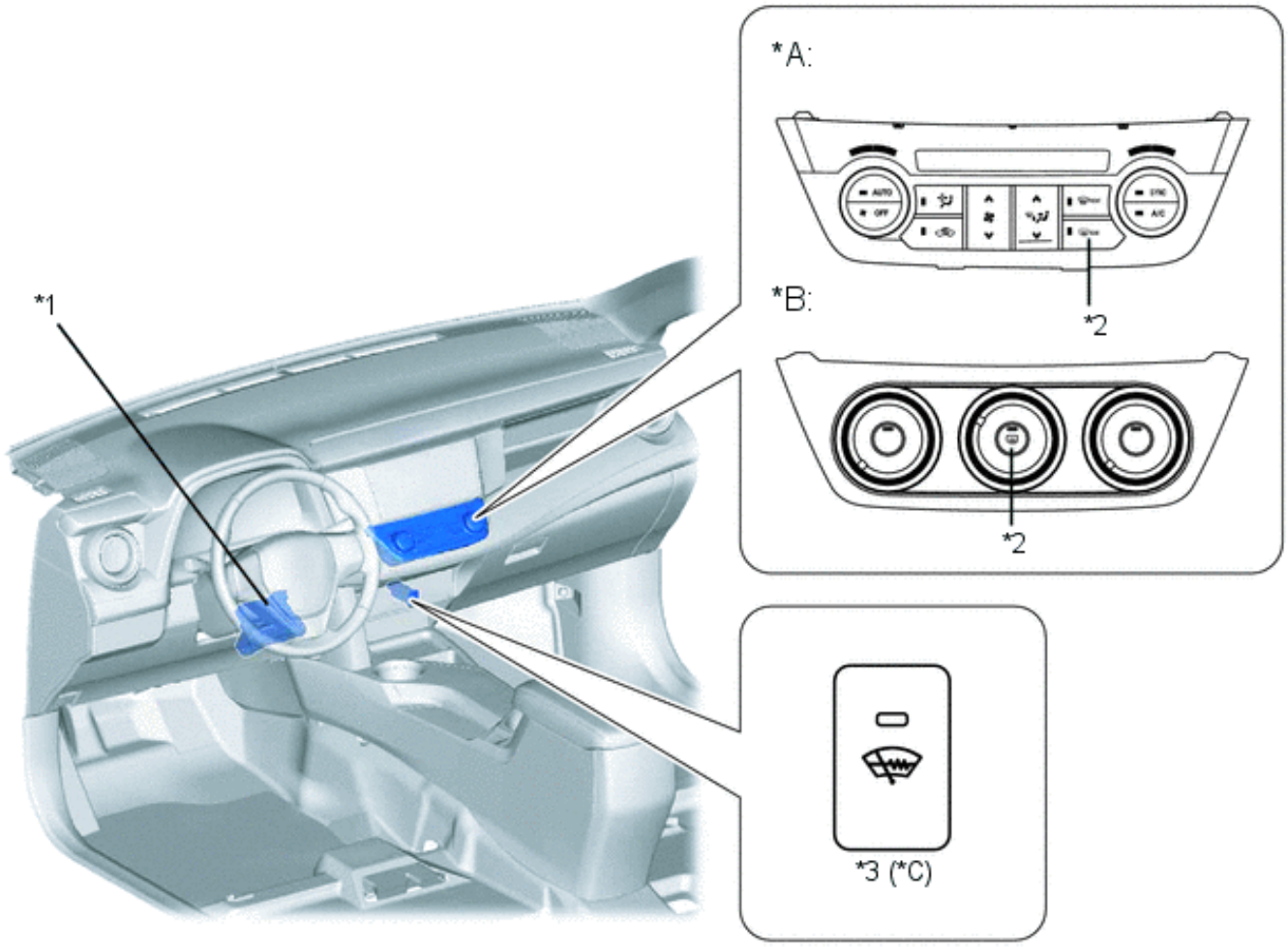


| | | | |
|---|---|---|---|
| *A | Models with Automatic Air Conditioning System | *B | Models with Manual Air Conditioning |
| *C | Models with Windshield Deicer System | - | - |
| *1 | Air Conditioning Amplifier Assembly | *2 | Rear Window Defogger Switch |
| *3 | Windshield Deicer Switch | - | - |

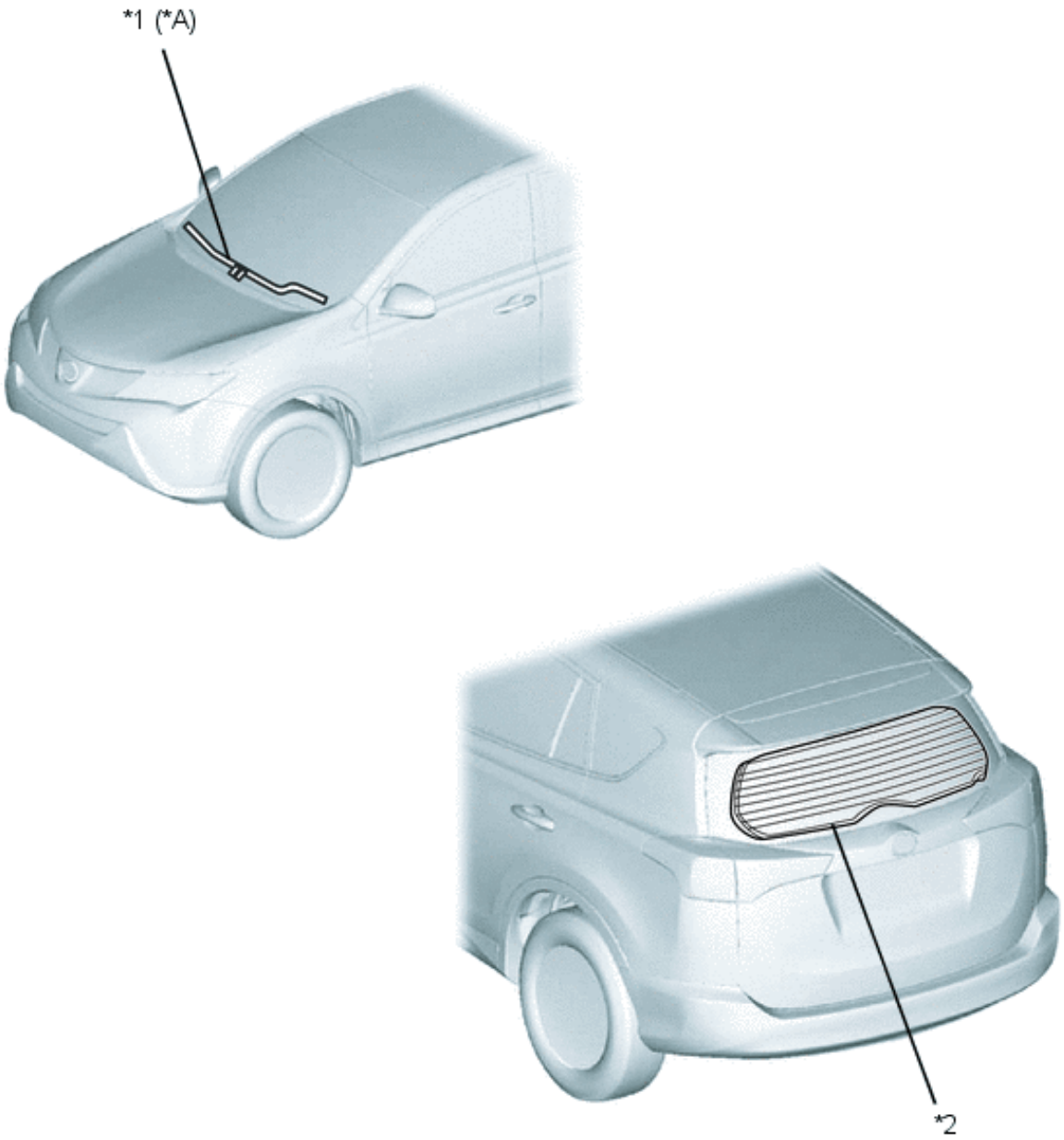


Y

| | | | |
|---|---|---|---|
| *A | Models with Windshield Deicer System | - | - |
| *1 | Windshield Deicer Wire | *2 | Rear Window Defogger Wire |