| | | |
|---|---|---|
| **Last Modified:** 03-12-2013 | 6.4 F | **Doc ID:** NM1000000005PUX |
| **Model Year:** 2013 | **Model:** RAV4 | **Prod Date Range:** [12/2012 - ] |
| **Title:** POWER ASSIST SYSTEMS: POWER STEERING SYSTEM: POWER STEERING MOTOR; 2013 MY RAV4 [12/2012 - ] | | |

# POWER STEERING MOTOR

## 1. CONSTRUCTION

(a) A low-inertia, low-noise, high-power output brushless motor is used.

(b) The operating range of the power steering motor is 9 V to 16 V.

(c) The power steering motor consists of a rotor, stator, motor shaft and rotation angle sensor.

(d) The torque generated by the power steering motor is transmitted via the joint to the worm gear. This torque is then transmitted via the wheel gear to the column shaft.

(e) The rotation angle sensor consists of a resolver sensor which excels in reliability and durability. The rotation angle sensor detects the rotation angle of the power steering motor and outputs it to the power steering ECU assembly. As a result, the rotation angle sensor ensures efficient EPS control.

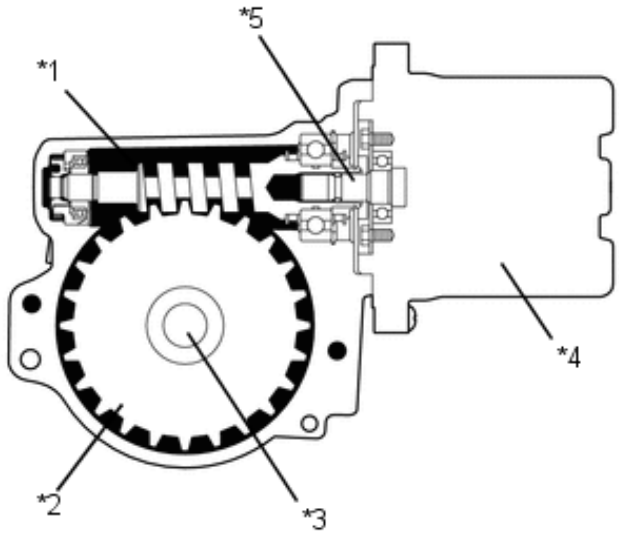


Y

| | | | |
|---|---|---|---|
| *1 | Worm Gear | *2 | Wheel Gear |
| *3 | Column Shaft | *4 | Power Steering Motor<br>• Rotor<br>• Stator<br>• Rotation Angle Sensor |
| *5 | Motor Shaft | - | - |