| | | |
|---|---|---|
| **Last Modified:** 03-12-2013 | 6.4 F | **Doc ID:** NM1000000004IEG |
| **Model Year:** 2013 | **Model:** RAV4 | **Prod Date Range:** [12/2012 - ] |
| **Title:** SUPPLEMENTAL RESTRAINT SYSTEMS: AIRBAG SYSTEM: PASSENGER AIRBAG; 2013 MY RAV4 [12/2012 - ] | | |

# PASSENGER AIRBAG

## 1. CONSTRUCTION

(a) The instrument panel passenger without door airbag assembly is located in the upper section of the instrument panel of the front passenger seat.

(b) The instrument panel passenger without door airbag assembly consists of an inflator and a bag.

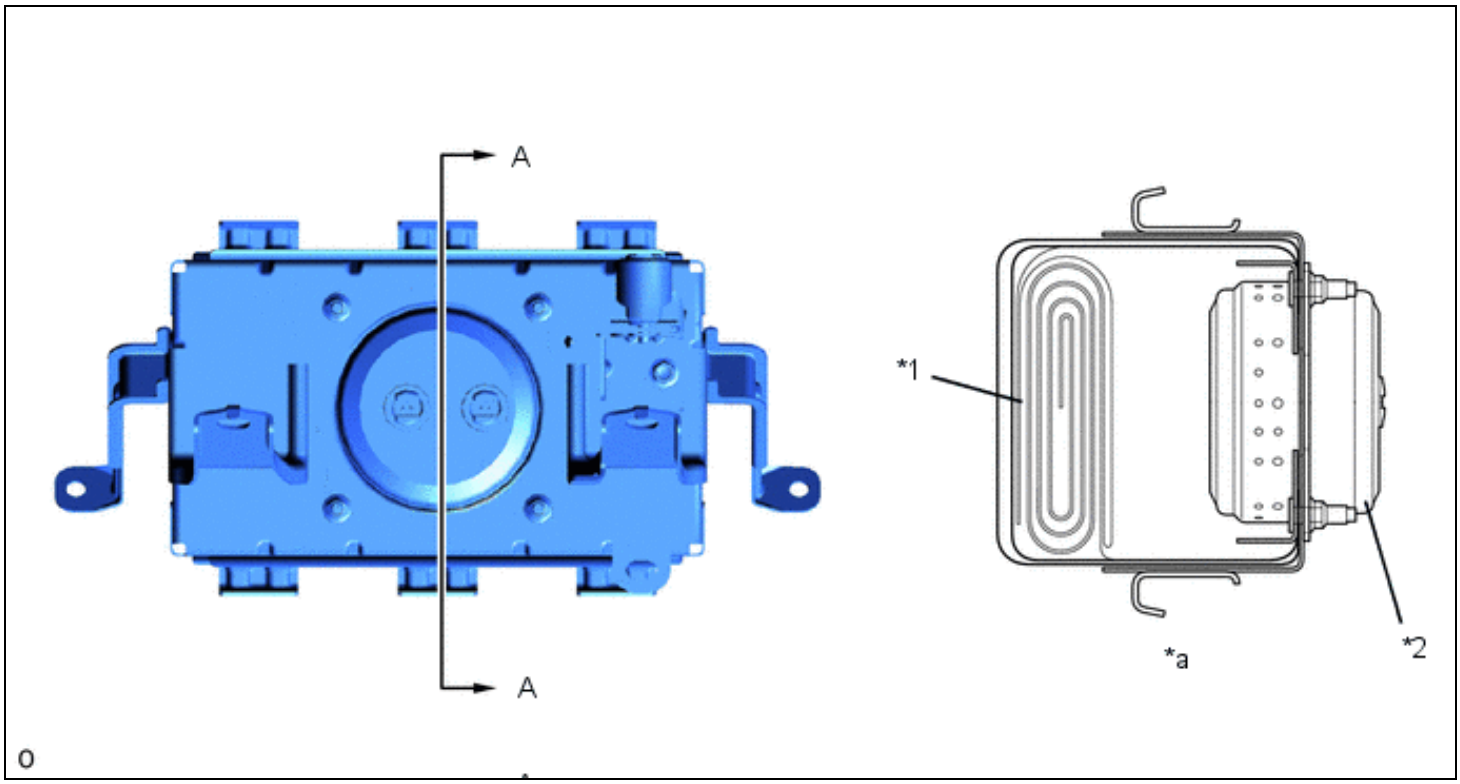


| | | | |
|---|---|---|---|
| *1 | Bag | *2 | Inflator |
| *a | A - A Cross Section | - | - |