| | | |
|---|---|---|
| **Last Modified:** 03-12-2013 | 6.4 F | **Doc ID:** NM1000000004HBR |
| **Model Year:** 2013 | **Model:** RAV4 | **Prod Date Range:** [12/2012 - ] |
| **Title:** 2AR-FE ENGINE CONTROL: SFI SYSTEM: FUEL PUMP CONTROL; 2013 MY RAV4 [12/2012 - ] | | |

# FUEL PUMP CONTROL

## 1. FUNCTION

(a) 2WD Models

(1) In this vehicle, there are 2 types of fuel pump controls. The fuel pump is controlled to an optimum speed to match the engine operating conditions, and the fuel pump operation is stopped when any of the Supplemental Restraint System (SRS) airbags deploy.

(2) The ECM transmits a fuel pump operation request signal to the fuel pump control ECU assembly that corresponds to the engine operating conditions. The fuel pump control ECU assembly receives this request signal and controls the speed of the fuel pump. As a result, under light engine loads, fuel pump speed is kept low to reduce electric power loss.

(3) A fuel cut control is used to stop the fuel pump when any of the SRS airbags deploys. In this control, if an airbag deployment signal from the center airbag sensor assembly is detected by the ECM, the ECM will turn off the No. 1 EFI main relay. As a result, the power supply to the fuel pump control ECU assembly is stopped, causing the fuel pump to stop operating. After the fuel cut control has been activated, turning the ignition switch (engine switch*) from off to on cancels the fuel cut control, and the engine can be restarted.

*: Models with smart key system

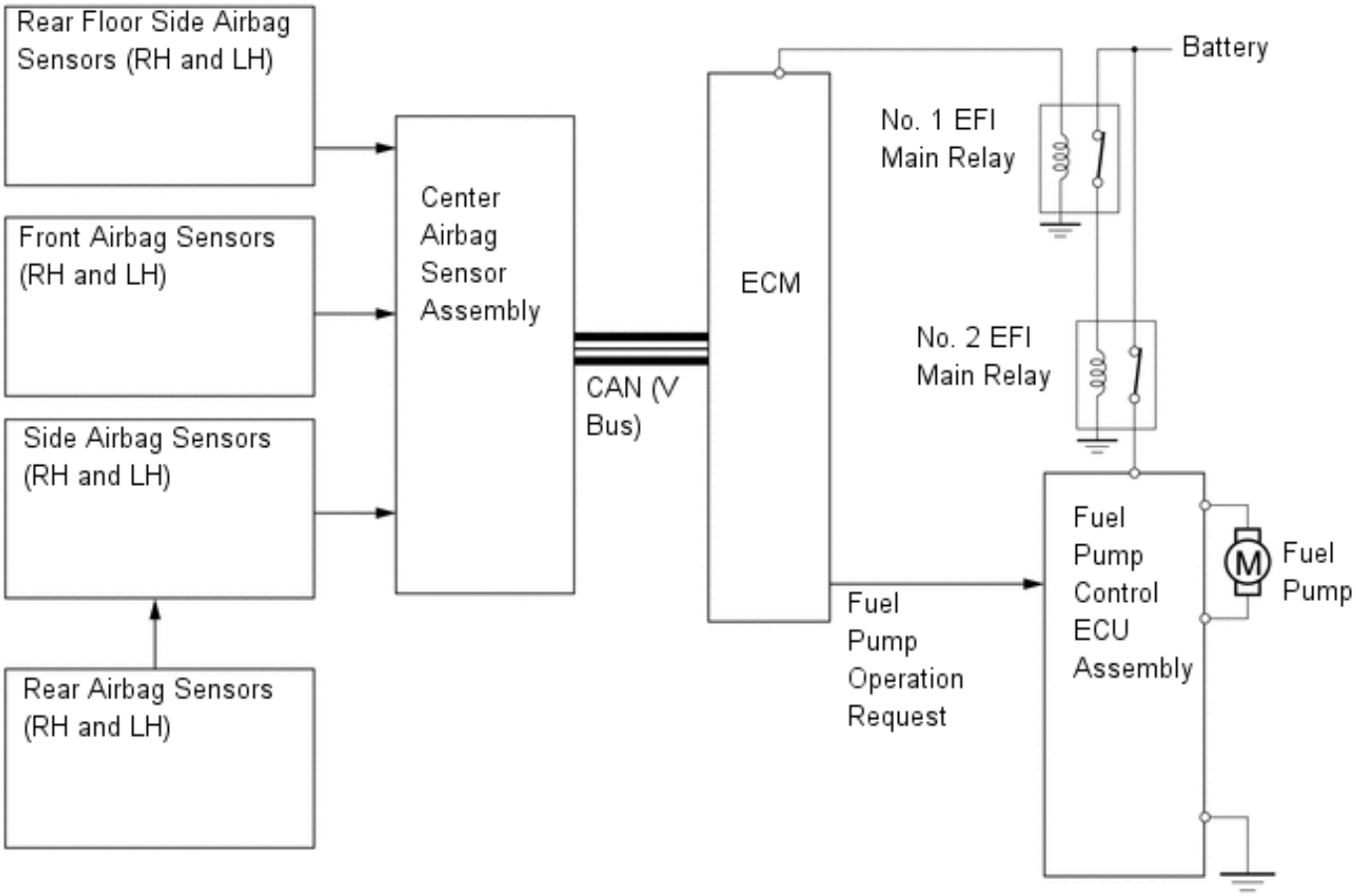


(b) AWD Models

(1) A fuel cut control is used to stop the fuel pump when the SRS airbag is deployed at the front collision. In this system, the airbag deployment signal from the airbag sensor is detected by the ECM, which turns off the circuit opening relay.

(2) After the fuel cut control has been activated, turning the ignition switch (engine switch*) from off to on cancels the fuel cut control, and the engine can be restarted.

*: Models with smart key system

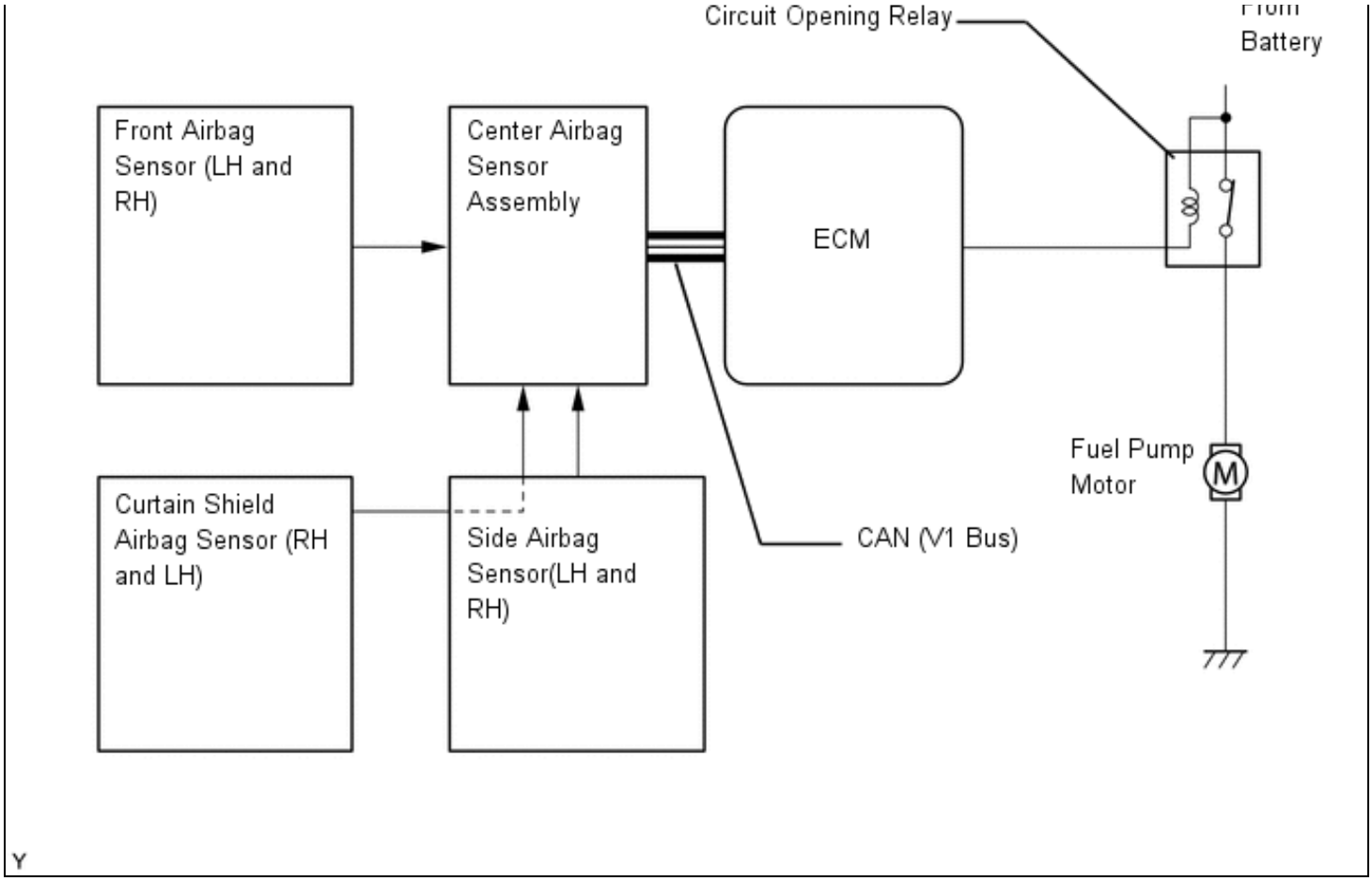
Circuit Opening Relay
From Battery
Front Airbag Sensor (LH and RH)
Center Airbag Sensor Assembly
ECM
Fuel Pump Motor
M
Curtain Shield Airbag Sensor (RH and LH)
Side Airbag Sensor(LH and RH)
CAN (V1 Bus)
Y