| | | |
|---|---|---|
| **Last Modified:** 03-12-2013 | 6.4 F | **Doc ID:** NM1000000005II6 |
| **Model Year:** 2013 | **Model:** RAV4 | **Prod Date Range:** [12/2012 - ] |
| **Title:** HEATING / AIR CONDITIONING: AIR CONDITIONING SYSTEM: NO. 1 COOLER EVAPORATOR; 2013 MY RAV4 [12/2012 - ] | | |

# NO. 1 COOLER EVAPORATOR

## 1. CONSTRUCTION

(a) A Revolutionary super-slim Structure (RS) evaporator is used. By placing the tanks at the top and the bottom of the No. 1 cooler evaporator sub-assembly and by using a micropore tube construction, the following effects have been achieved:

(1) The temperature distribution has been made uniform.

(2) The No. 1 cooler evaporator sub-assembly has been made thinner.

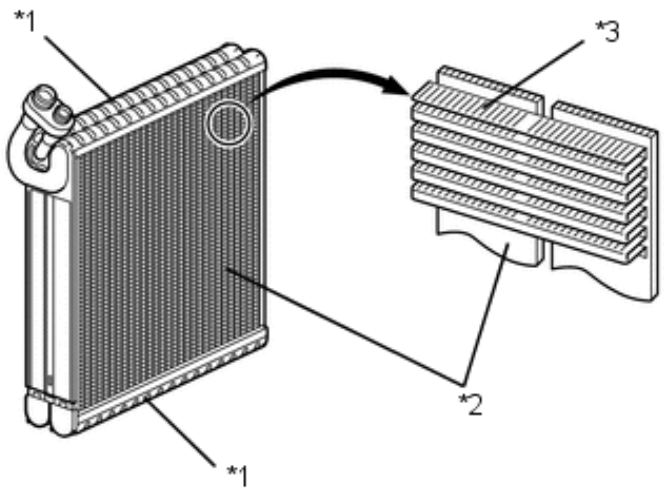


| | | | |
|---|---|---|---|
| *1 | Tank | *2 | Micropore Tube |
| *3 | Cooling Fin | - | - |