| | | |
|---|---|---|
| **Last Modified:** 03-12-2013 | 6.4 F | **Doc ID:** NM1000000005II1 |
| **Model Year:** 2013 | **Model:** RAV4 | **Prod Date Range:** [12/2012 - ] |
| **Title:** LIGHTING (EXT): LIGHTING SYSTEM: SYSTEM DIAGRAM; 2013 MY RAV4 [12/2012 - ] | | |

# SYSTEM DIAGRAM

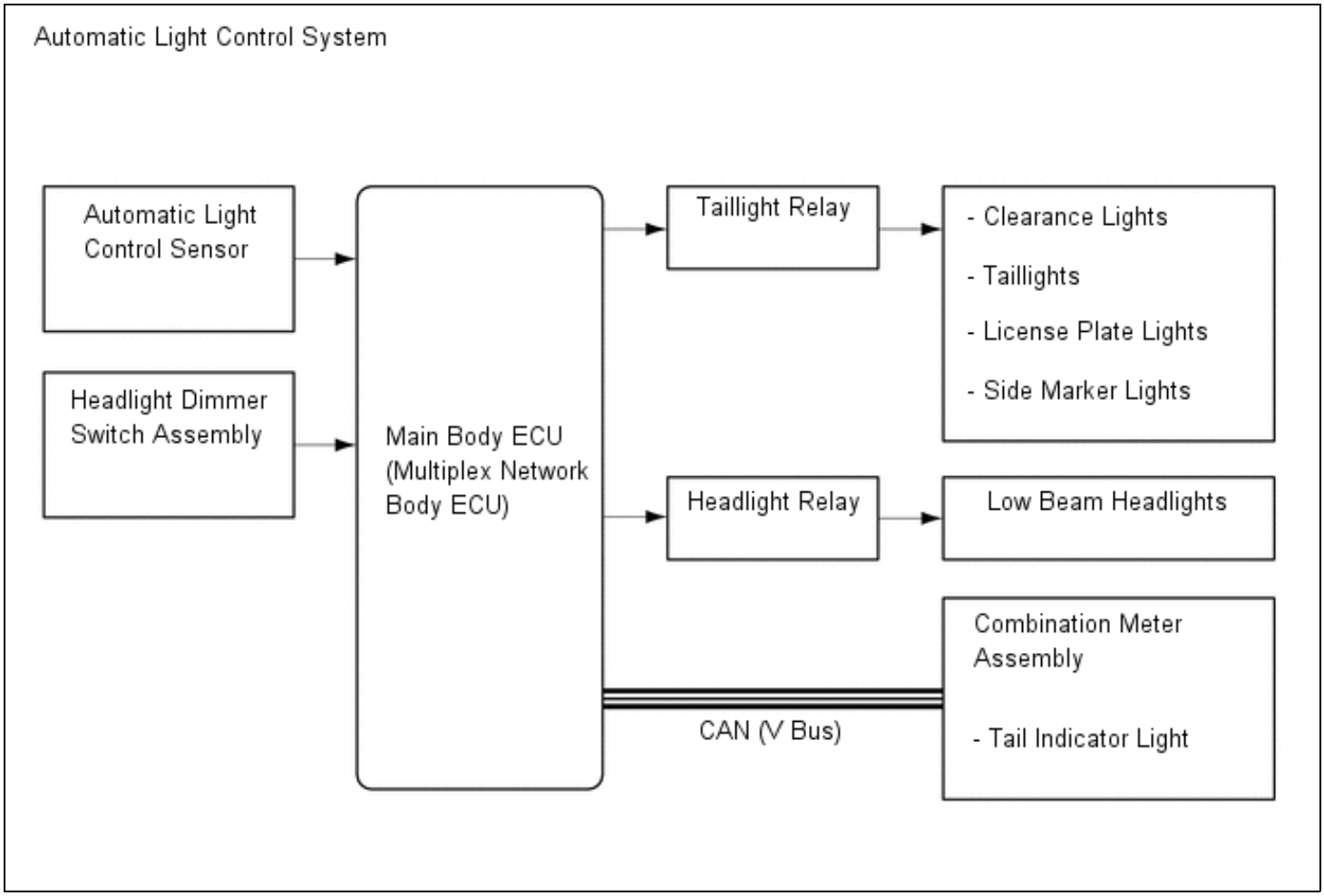

Light Auto Turn-off System

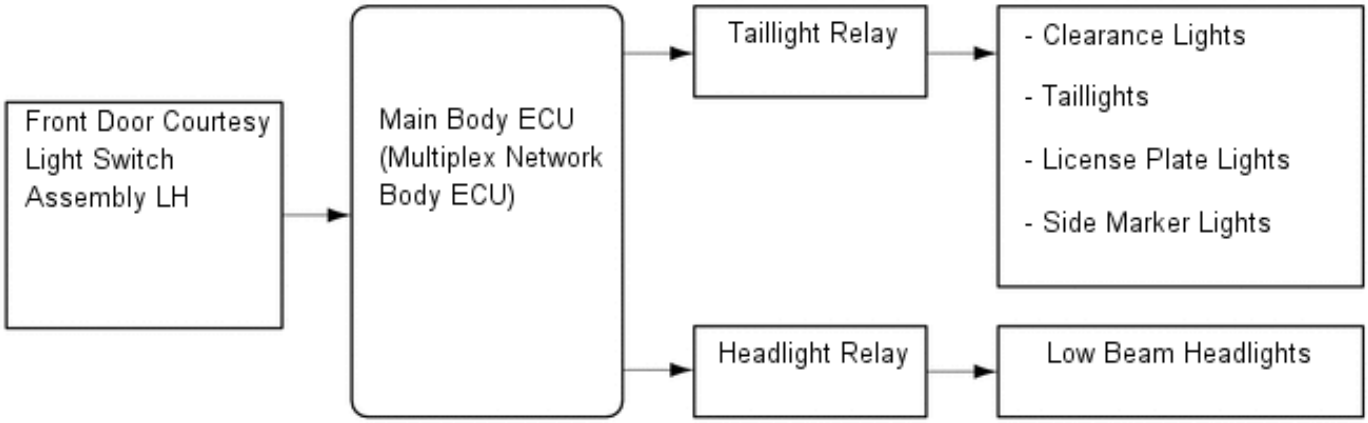


Daytime Running Light System

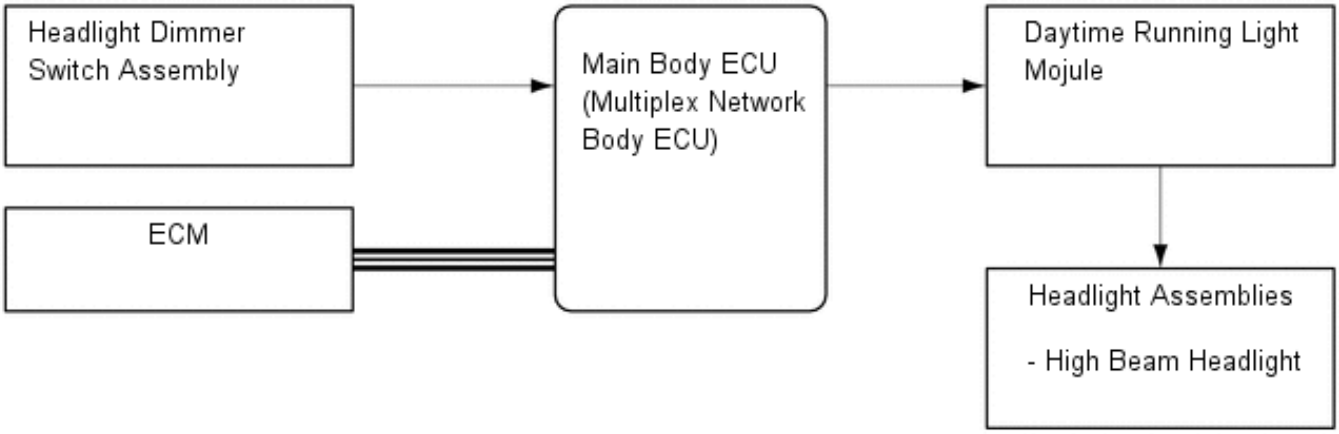


Automatic High Beam (AHB) System

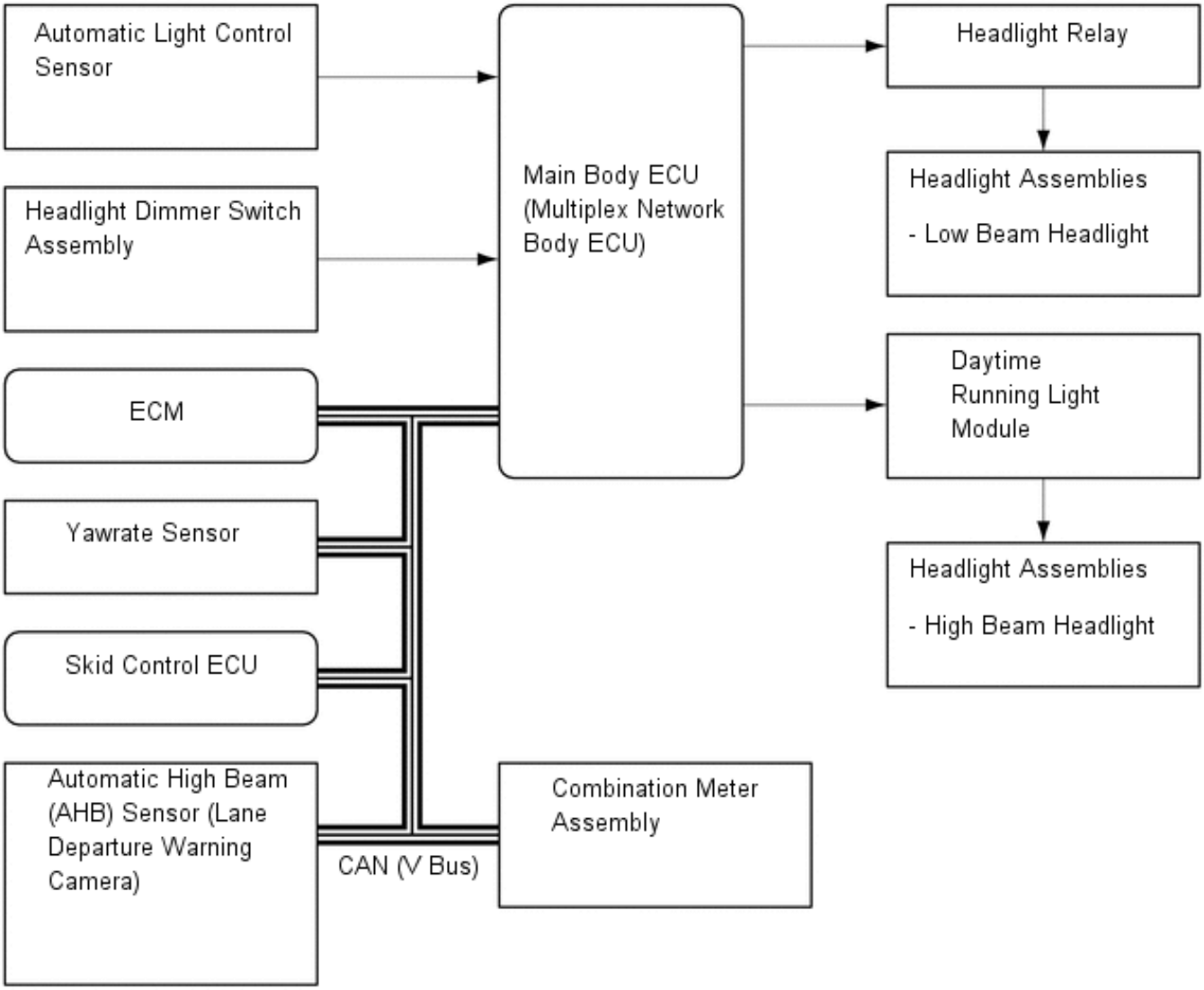
Automatic Light Control Sensor
Headlight Dimmer Switch Assembly
ECM
Yawrate Sensor
Skid Control ECU
Automatic High Beam (AHB) Sensor (Lane Departure Warning Camera)
CAN (V Bus)
Main Body ECU (Multiplex Network Body ECU)
Combination Meter Assembly
Headlight Relay
Headlight Assemblies
- Low Beam Headlight
Daytime Running Light Module
Headlight Assemblies
- High Beam Headlight