| | | |
|---|---|---|
| **Last Modified:** 03-12-2013 | 6.4 F | **Doc ID:** NM1000000005PTI |
| **Model Year:** 2013 | **Model:** RAV4 | **Prod Date Range:** [12/2012 - ] |
| **Title:** GF1A TRANSFER / 4WD / AWD: DYNAMIC TORQUE CONTROL AWD SYSTEM: TRANSFER; 2013 MY RAV4 [12/2012 - ] | | |

# TRANSFER

## 1. CONSTRUCTION

(a) A side-to-side split transfer case made of aluminum is used to achieve a compact and lightweight construction.

(b) A unit ball bearing is used for supporting the driven pinion gear to achieve a compact and lightweight construction.

(c) The ring gear and the transfer ring gear mounting case are joined with splines to achieve a compact construction.

(d) Drive force input into the differential is redirected 90 degrees and output to the propeller shaft by the transfer.

(e) The offset between the transfer ring gear and the transfer driven pinion gear is increased, the distance between the driven pinion bearings is reduced and a small-diameter ring gear mount bearing is used. As a result, the transfer is easier to install.

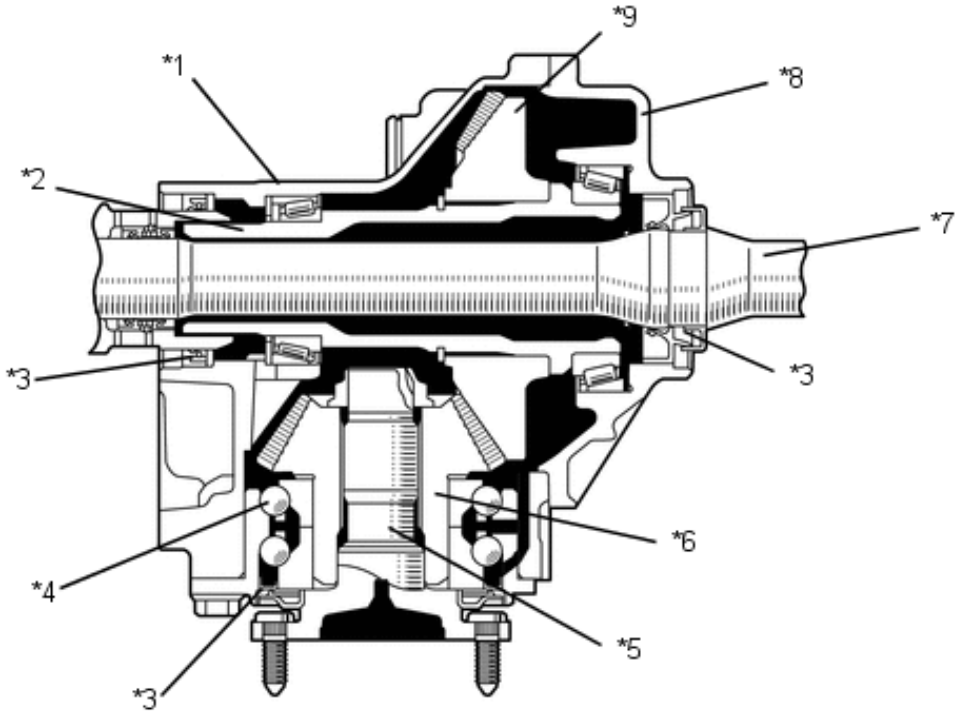


| | | | |
|---|---|---|---|
| *1 | Transfer Case | *2 | Transfer Ring Gear Mounting Case |
| *3 | Oil Seal | *4 | Unit Ball Bearing |
| *5 | Transfer Driven Pinion Shaft | *6 | Transfer Driven Pinion Gear |
| *7 | Drive Shaft | *8 | Transfer Cover |
| *9 | Transfer Ring Gear | - | - |

## 2. OPERATION

(a) Transfer Power Flow

(1) The illustration below shows the flow of power from the transaxle:

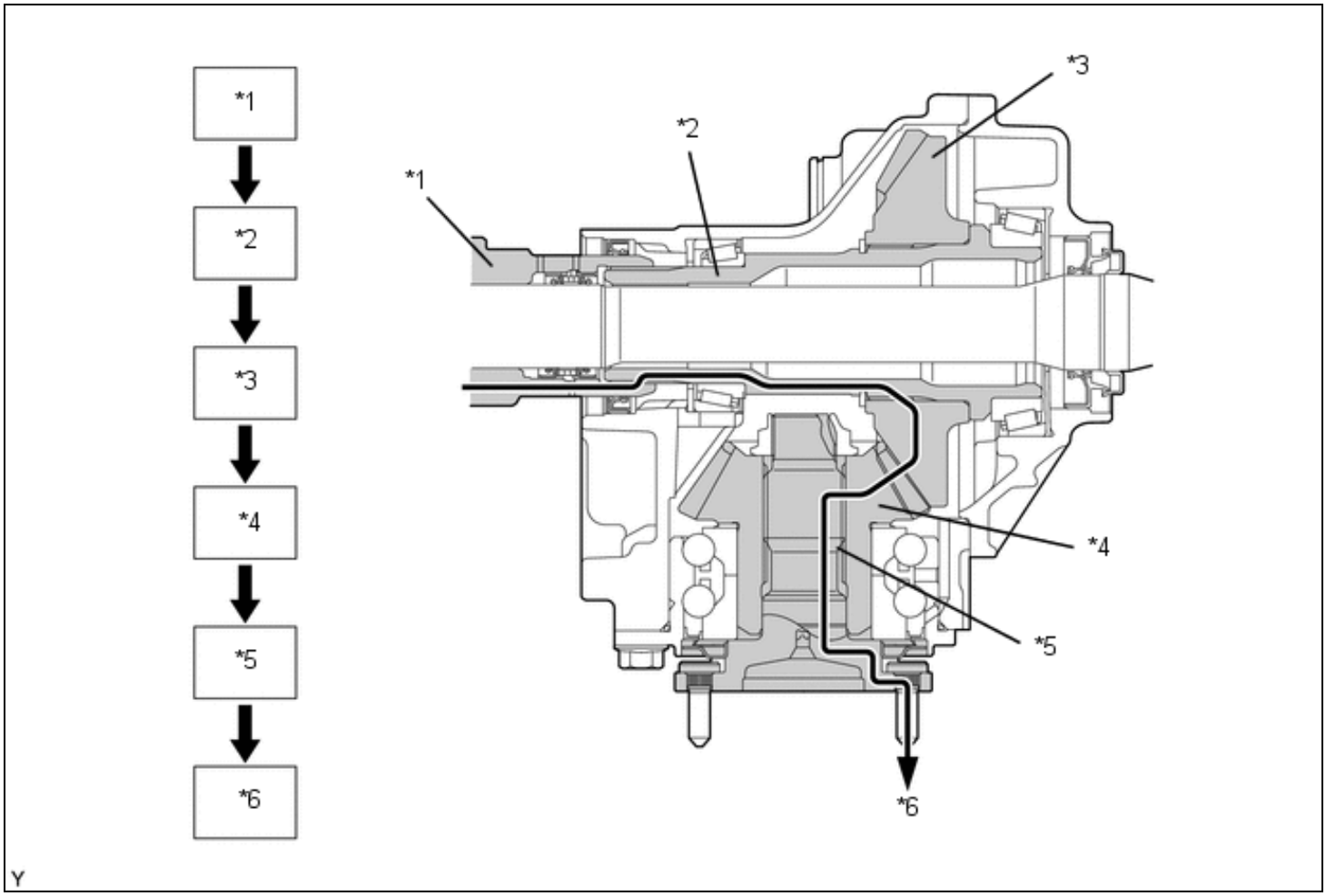


| | | | |
|---|---|---|---|
| *1 | Transaxle Differential Case | *2 | Transfer Ring Gear Mounting Case |
| *3 | Transfer Ring Gear | *4 | Transfer Driven Pinion Gear |
| *5 | Transfer Driven Pinion Shaft | *6 | Propeller Shaft |
| ➡ | Power Flow | - | - |