| | | |
|---|---|---|
| **Last Modified:** 03-12-2013 | 6.4 F | **Doc ID:** NM1000000005PTS |
| **Model Year:** 2013 | **Model:** RAV4 | **Prod Date Range:** [12/2012 - ] |
| **Title:** DRIVE SHAFT / PROPELLER SHAFT: PROPELLER SHAFT SYSTEM: GENERAL; 2013 MY RAV4 [12/2012 - ] | | |

# GENERAL

## 1. OUTLINE

(a) Rear Propeller Shaft (AWD Models)

(1) A 3-joint, 2-shaft type propeller shaft is used.

(2) A tripod type Constant-Velocity Joint (CVJ), which is more compact and lightweight than the conventional cross-groove type CVJ, is used for the center CVJ. Furthermore, a compact and lightweight shell-cap type joint is used at each end.

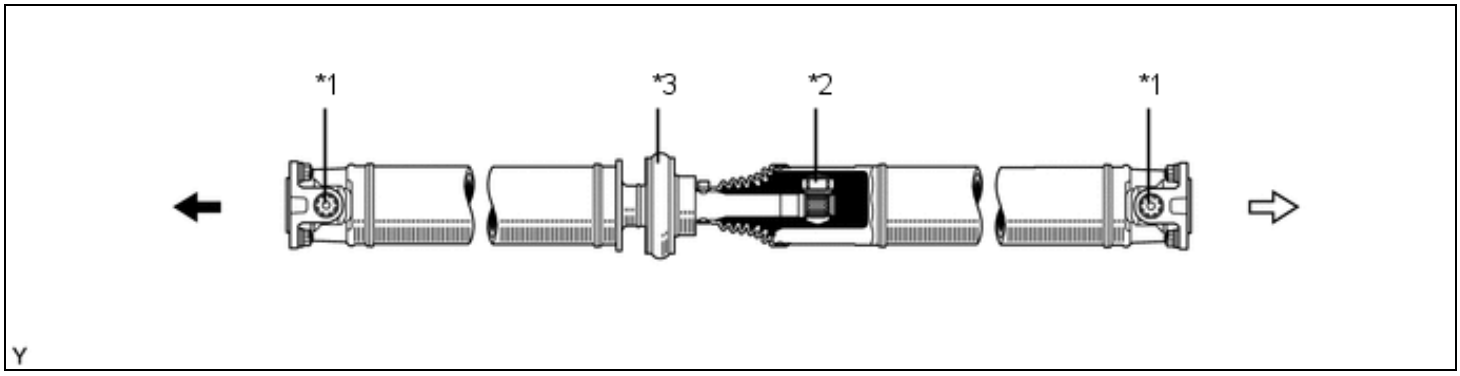


| | | | |
|---|---|---|---|
| *1 | Shell-cap Type Joint | *2 | Tripod Type CVJ |
| *3 | Center Bearing | - | - |
| ➡ | Transfer Side | ⇨ | Rear Differential Side |