| | | |
|---|---|---|
| **Last Modified:** 03-12-2013 | 6.4 F | **Doc ID:** NM1000000004HDU |
| **Model Year:** 2013 | **Model:** RAV4 | **Prod Date Range:** [12/2012 - ] |
| **Title:** 2AR-FE LUBRICATION: LUBRICATION SYSTEM: GENERAL; 2013 MY RAV4 [12/2012 - ] | | |

# GENERAL

## 1. OUTLINE

(a) The lubrication circuit is fully pressurized and oil passes through an oil filter.

(b) This engine has an oil return system in which the oil is force-fed to the upper cylinder head and returns to the oil pan through the oil return hole in the cylinder head.

(c) A cycloid rotor type oil pump is used. The oil pump is directly driven by the crankshaft.

(d) The Dual VVT-i system is used. This system is operated by the engine oil.

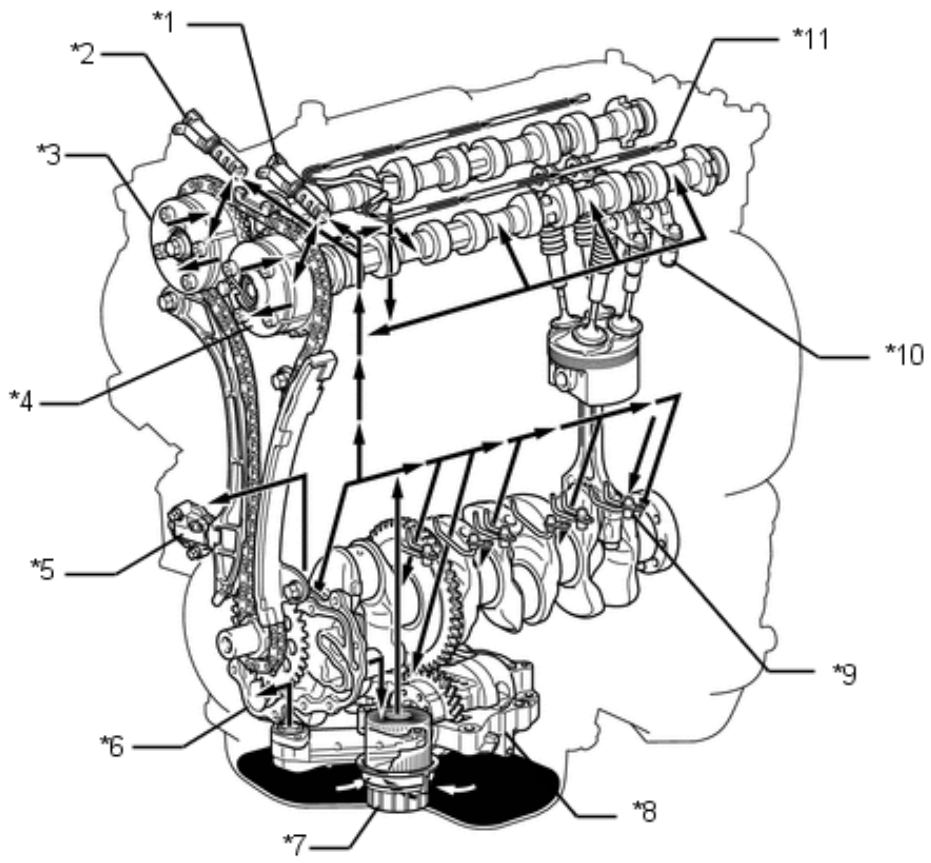


| | | | |
|---|---|---|---|
| *1 | Camshaft Timing Oil Control Valve Assembly (Exhaust) | *2 | Camshaft Timing Oil Control Valve Assembly (Intake) |
| *3 | Intake VVT-i Controller | *4 | Exhaust VVT-i Controller |
| *5 | Chain Tensioner | *6 | Oil Pump |
| *7 | Oil Filter | *8 | Balance Shaft |
| *9 | Oil Nozzle Sub-assembly | *10 | Valve Lash Adjuster Assembly |
| *11 | Oil Delivery Pipe | - | - |