| | | |
|---|---|---|
| **Last Modified:** 03-12-2013 | 6.4 F | **Doc ID:** NM1000000004IED |
| **Model Year:** 2013 | **Model:** RAV4 | **Prod Date Range:** [12/2012 - ] |
| **Title:** PARK ASSIST / MONITORING: MONITOR SYSTEM: PARTS LOCATION; 2013 MY RAV4 [12/2012 - ] | | |

# PARTS LOCATION

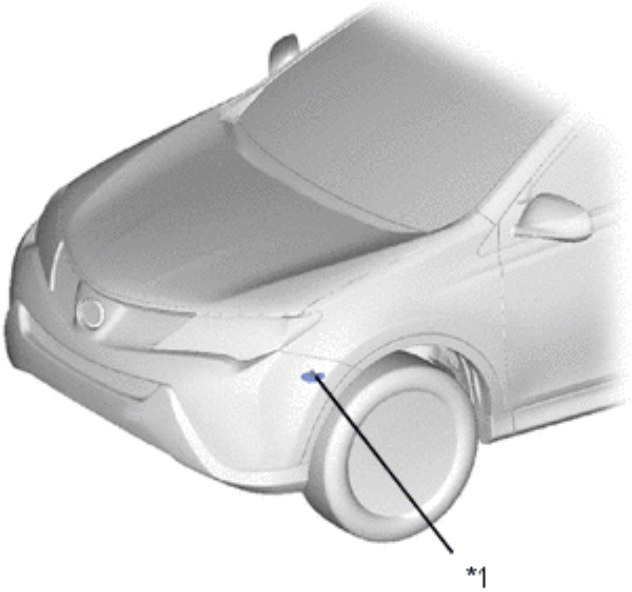


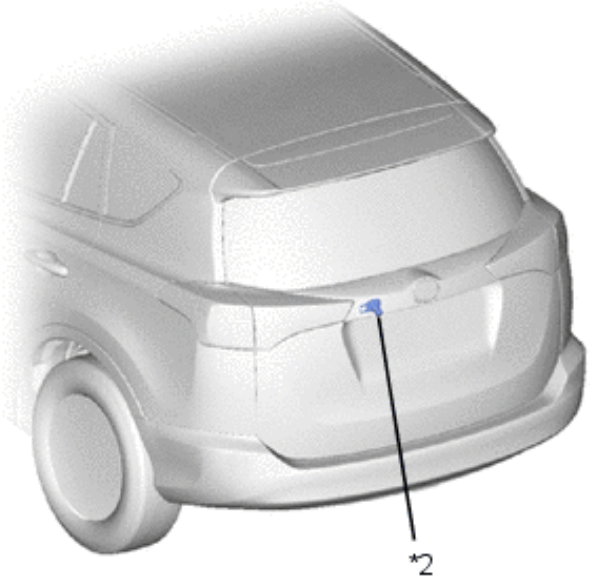


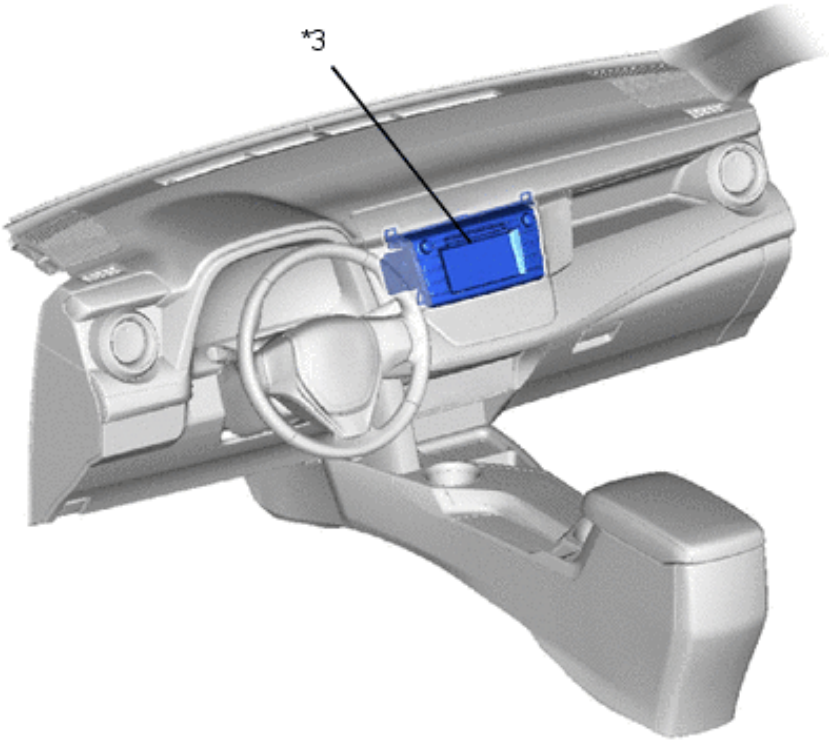


0

| | | | |
|---|---|---|---|
| *1 | Park/Neutral Position Switch Assembly | *2 | Rear Television Camera Assembly |
| *3 | Radio and Display Receiver Assembly | - | - |