| | | |
|---|---|---|
| **Last Modified:** 03-12-2013 | 6.4 F | **Doc ID:** NM1000000005Q6S |
| **Model Year:** 2013 | **Model:** RAV4 | **Prod Date Range:** [12/2012 - ] |
| **Title:** U760F AUTOMATIC TRANSMISSION / TRANSAXLE: AUTOMATIC TRANSAXLE SYSTEM: PLANETARY GEAR; 2013 MY RAV4 [12/2012 - ] | | |

# PLANETARY GEAR

## 1. CONSTRUCTION

(a) A 6-speed configuration has been achieved by using 2 planetary gear units, creating a 6-speed automatic transaxle.

(b) A Ravigneaux type planetary gear unit is used as the rear gear unit. The gear unit consists of pairs of sun gears (front and rear) and planetary pinion gears (long and short) with different diameters within a single planetary gear.

(c) A centrifugal fluid pressure canceling mechanism is used in the No. 1 clutch (C1) and No. 2 clutch (C2) that are applied when shifting between 1st to 6th gears.

(d) The shapes of the grooves in the clutches and brake linings have been optimized in order to reduce drag.

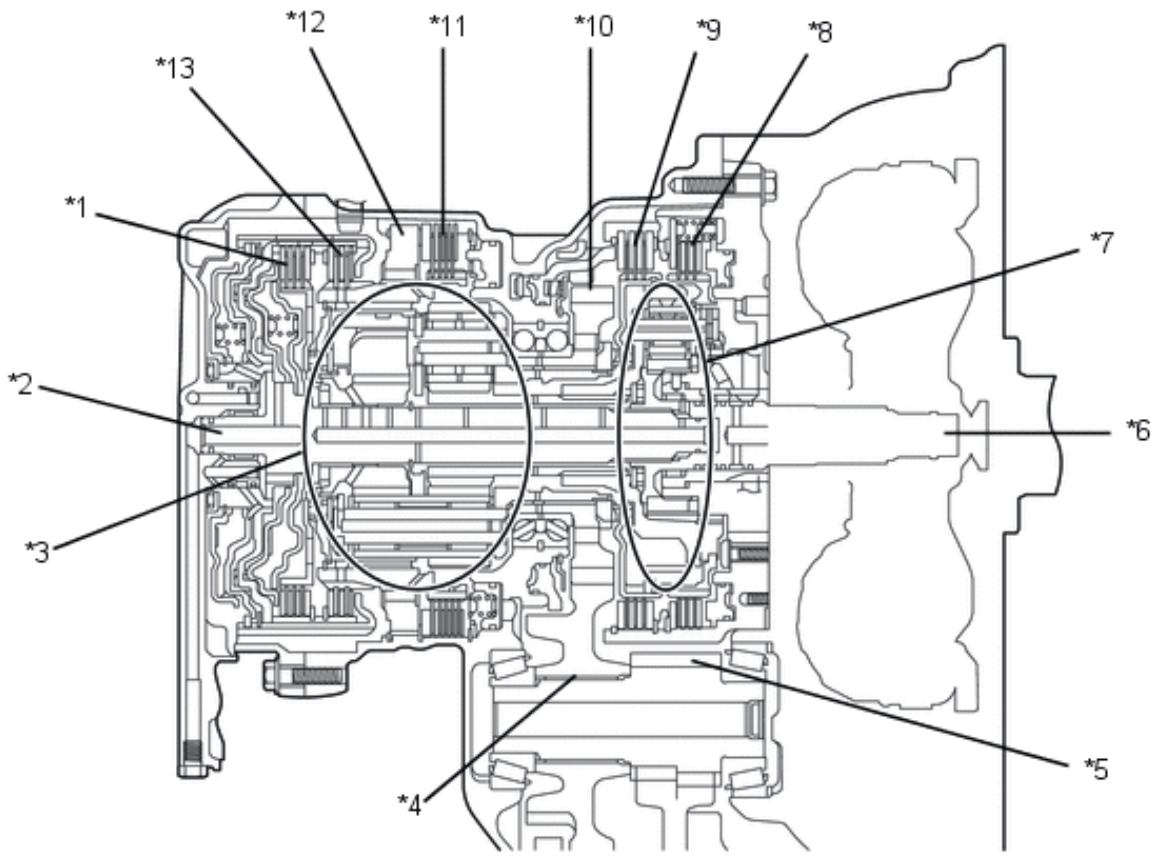


| | | | |
|---|---|---|---|
| *1 | No. 1 Clutch (C1) | *2 | Intermediate Shaft |
| *3 | Ravigneaux Planetary Gear Unit | *4 | Counter Driven Gear |
| *5 | Differential Drive Pinion | *6 | Input Shaft |
| *7 | Underdrive Planetary Gear Unit | *8 | No. 1 Brake (B1) |
| *9 | No. 3 Brake (B3) | *10 | Counter Drive Gear |

| | | | |
|---|---|---|---|
| *9 | No. 3 Brake (B3) | *10 | Counter Drive Gear |
| *11 | No. 2 Brake (B2) | *12 | No. 1 1-way Clutch (F1) |
| *13 | No. 2 Clutch (C2) | - | - |

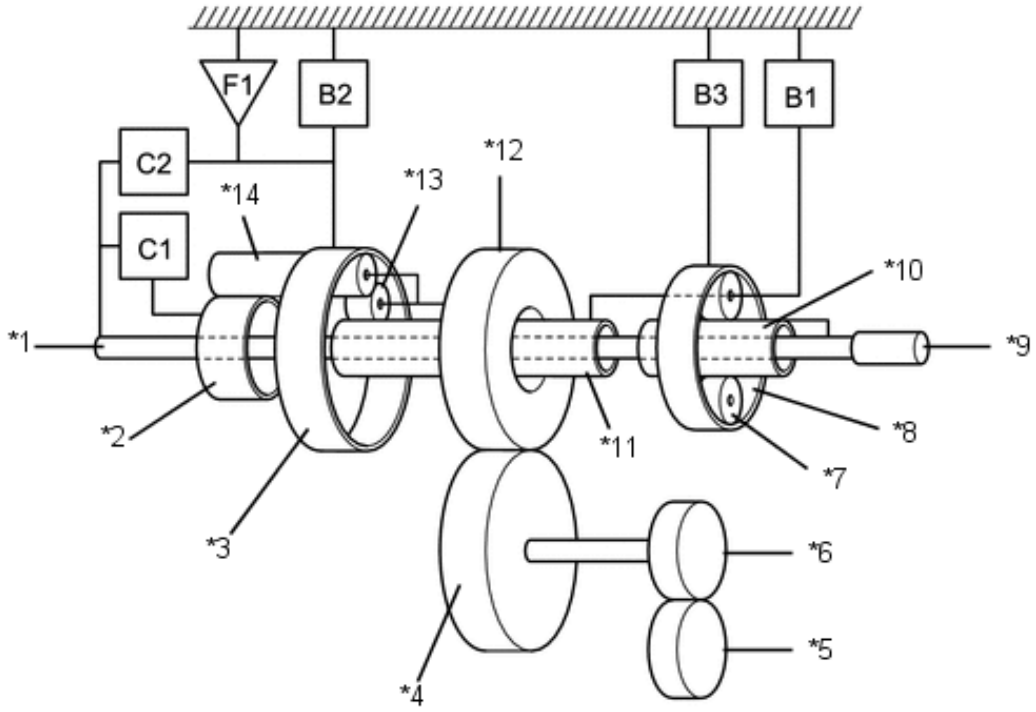


| | | | |
|---|---|---|---|
| *1 | Intermediate Shaft | *2 | Rear Sun Gear (Ravigneaux Planetary Gear Unit) |
| *3 | Ring Gear (Ravigneaux Planetary Gear Unit) | *4 | Counter Driven Gear |
| *5 | Ring Gear | *6 | Differential Drive Pinion |
| *7 | Pinion Gear (Underdrive Planetary Gear Unit) | *8 | Ring Gear (Underdrive Planetary Gear Unit) |
| *9 | Input Shaft | *10 | Sun Gear (Underdrive Planetary Gear Unit) |
| *11 | Front Sun Gear (Ravigneaux Planetary Gear Unit) | *12 | Counter Drive Gear |
| *13 | Short Pinion Gear (Ravigneaux Planetary Gear Unit) | *14 | Long Pinion Gear (Ravigneaux Planetary Gear Unit) |

**2. OPERATION**

(a) Transaxle Power Flow

## 1st Gear (Shift Lever in S1 Range)

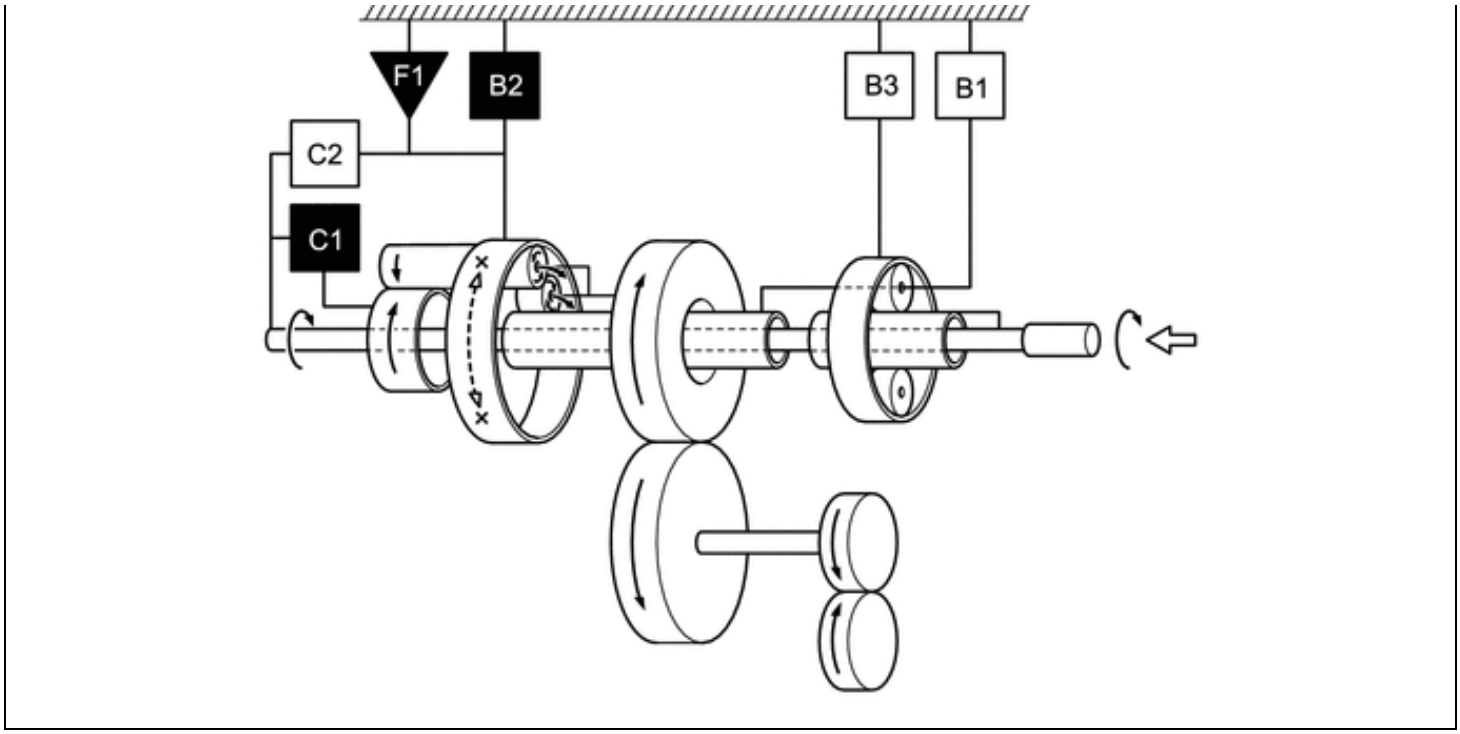


| | | | |
|---|---|---|---|
| ⇨ | Input | ■ | Operates |

**1st Gear (Shift Lever in D or in S6, S5, S4, S3 or S2 Range)**

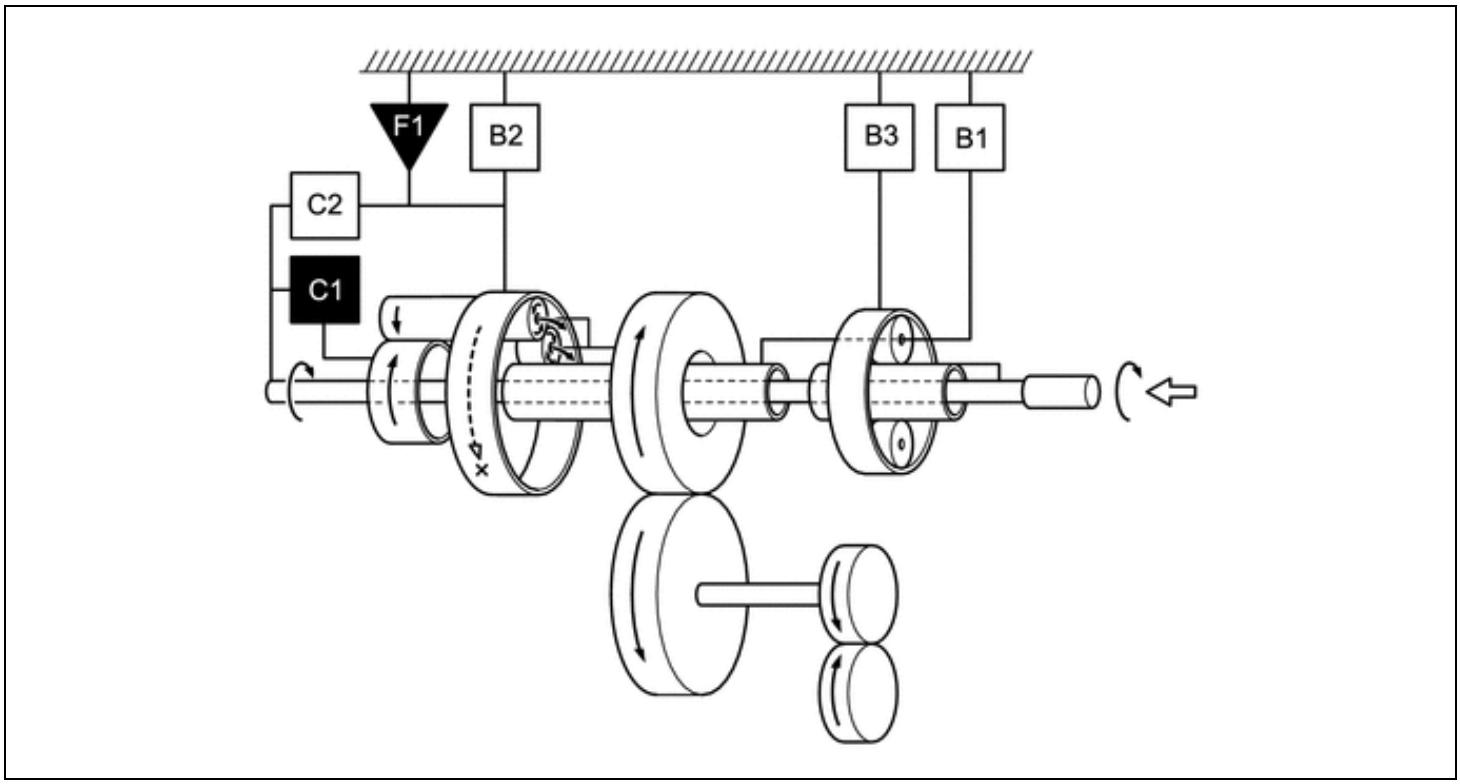


| | | | |
|---|---|---|---|
| ⇨ | Input | ■ | Operates |

| | | | |
|---|---|---|---|
| | Input | | Operates |

**2nd Gear (Shift Lever in D or S)**

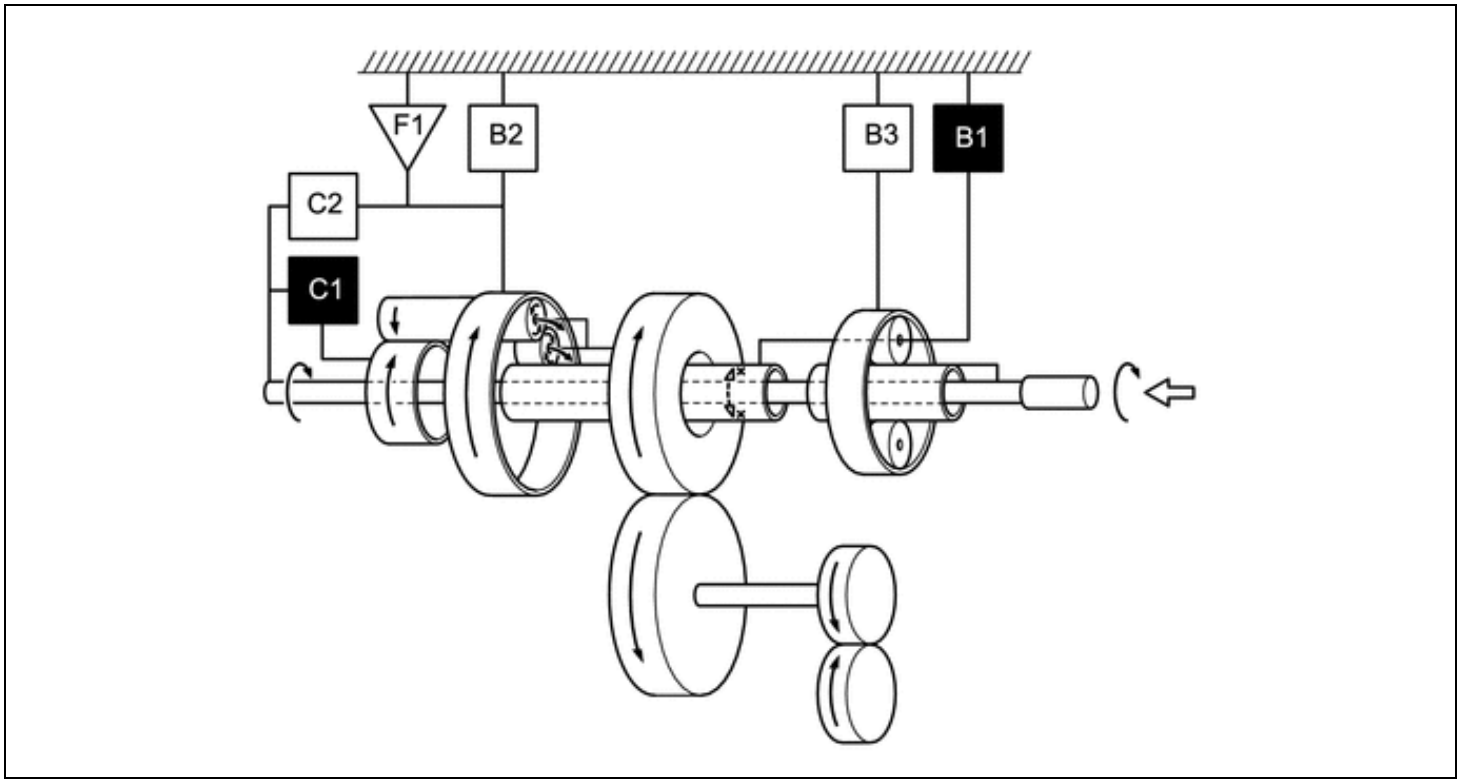


| | | | |
|---|---|---|---|
| ⇨ | Input | ■ | Operates |

**3rd Gear (Shift Lever in D or S)**

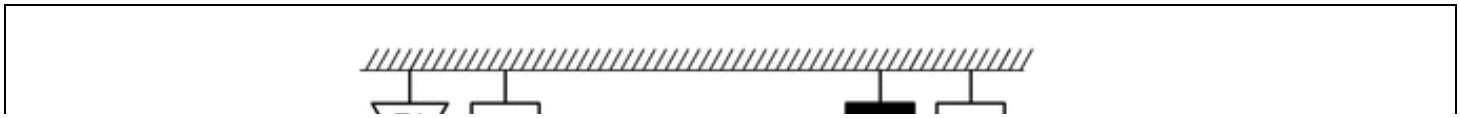

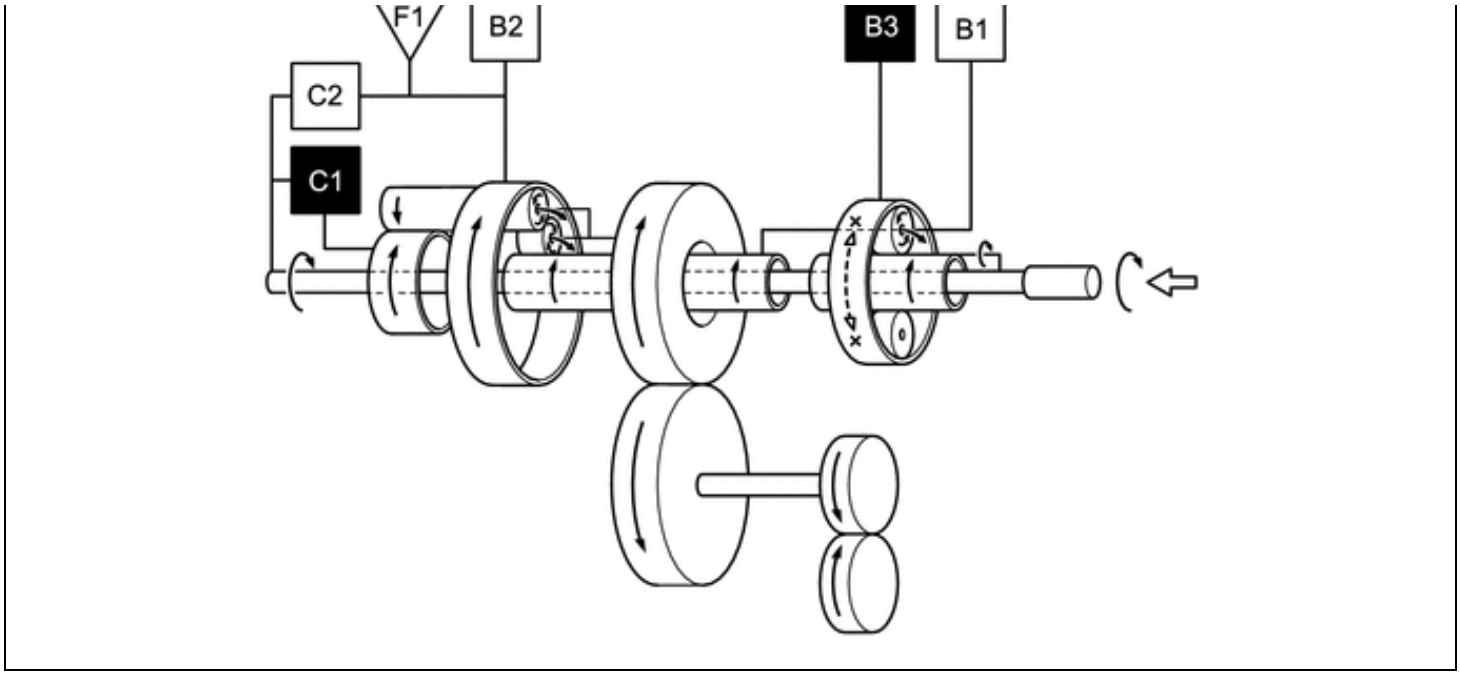


| | | | |
|---|---|---|---|
| ⇨ | Input | ■ | Operates |

**4th Gear (Shift Lever in D or S)**

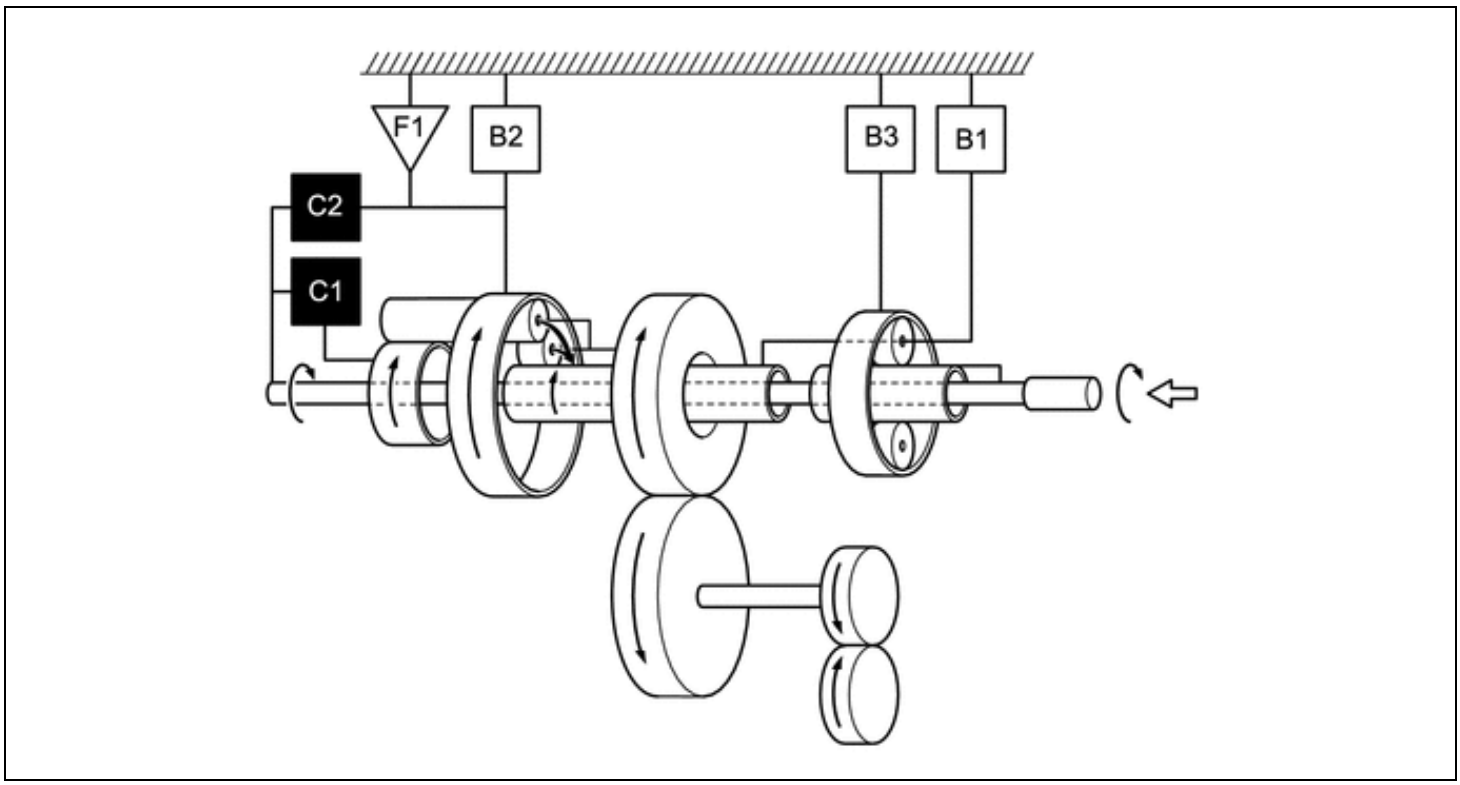


| | | | |
|---|---|---|---|
| ⇨ | Input | ■ | Operates |

| | | | |
|---|---|---|---|
| | | | |

**5th Gear (Shift Lever in D or S)**

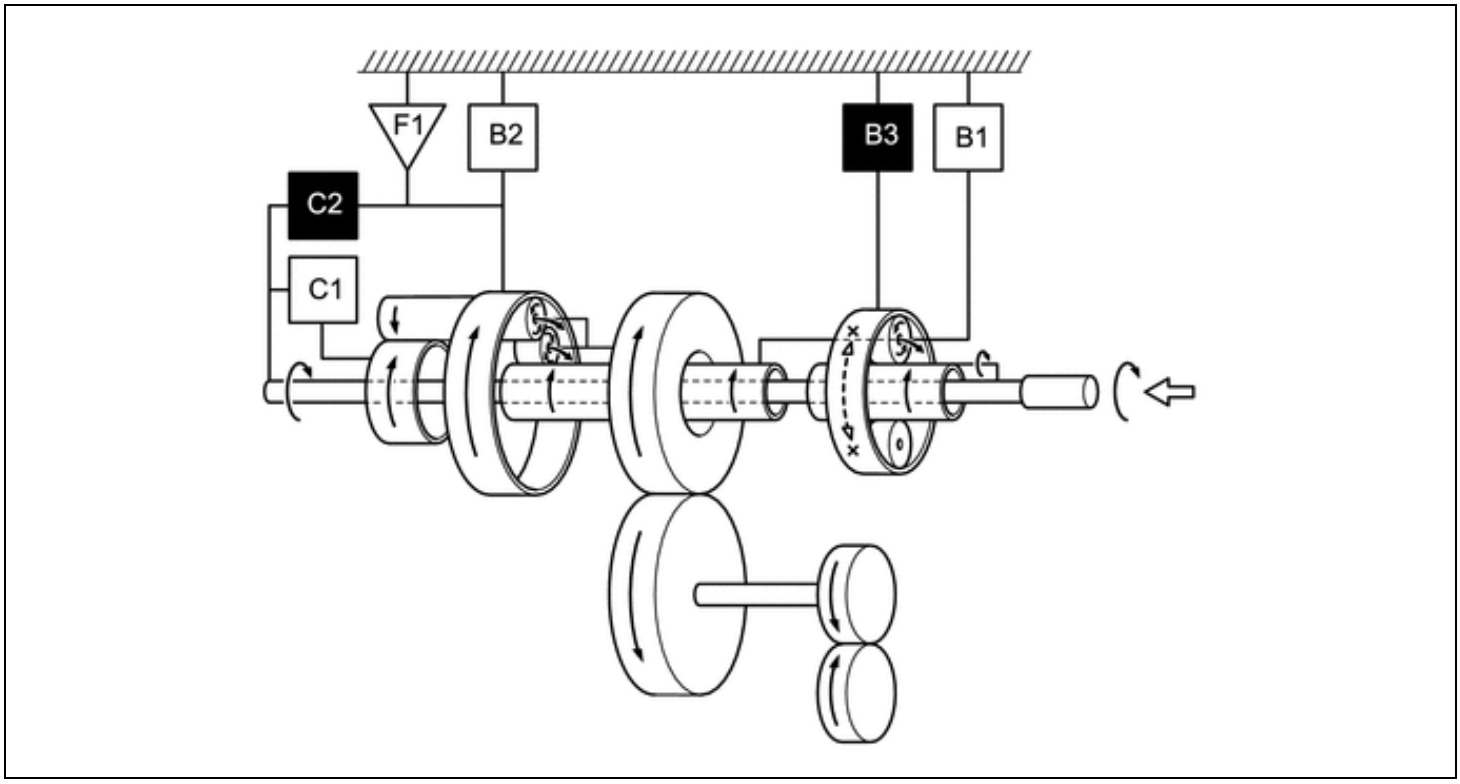


| | | | |
|---|---|---|---|
| ⇨ | Input | ■ | Operates |

**6th Gear (Shift Lever in D or S)**

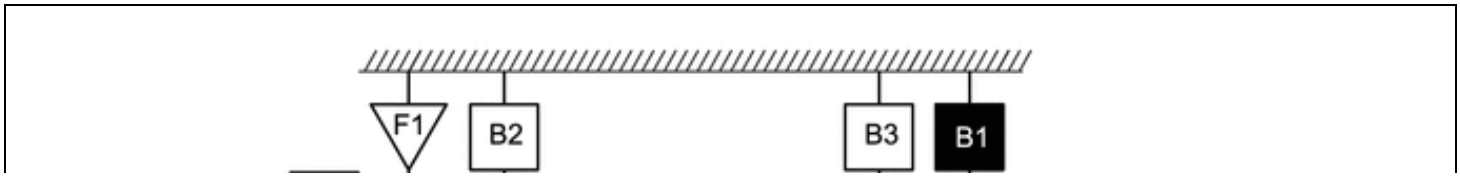

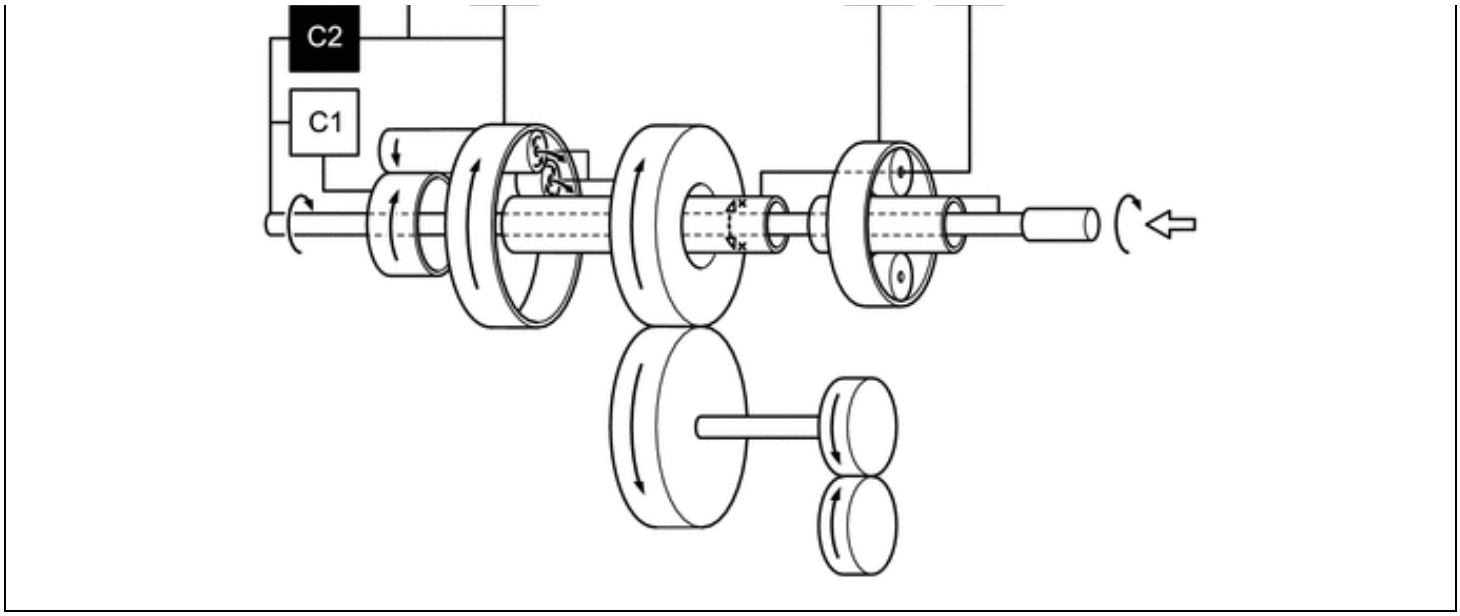


| | | | |
|---|---|---|---|
| ⇨ | Input | ■ | Operates |

**Reverse Gear (Shift Lever in R)**

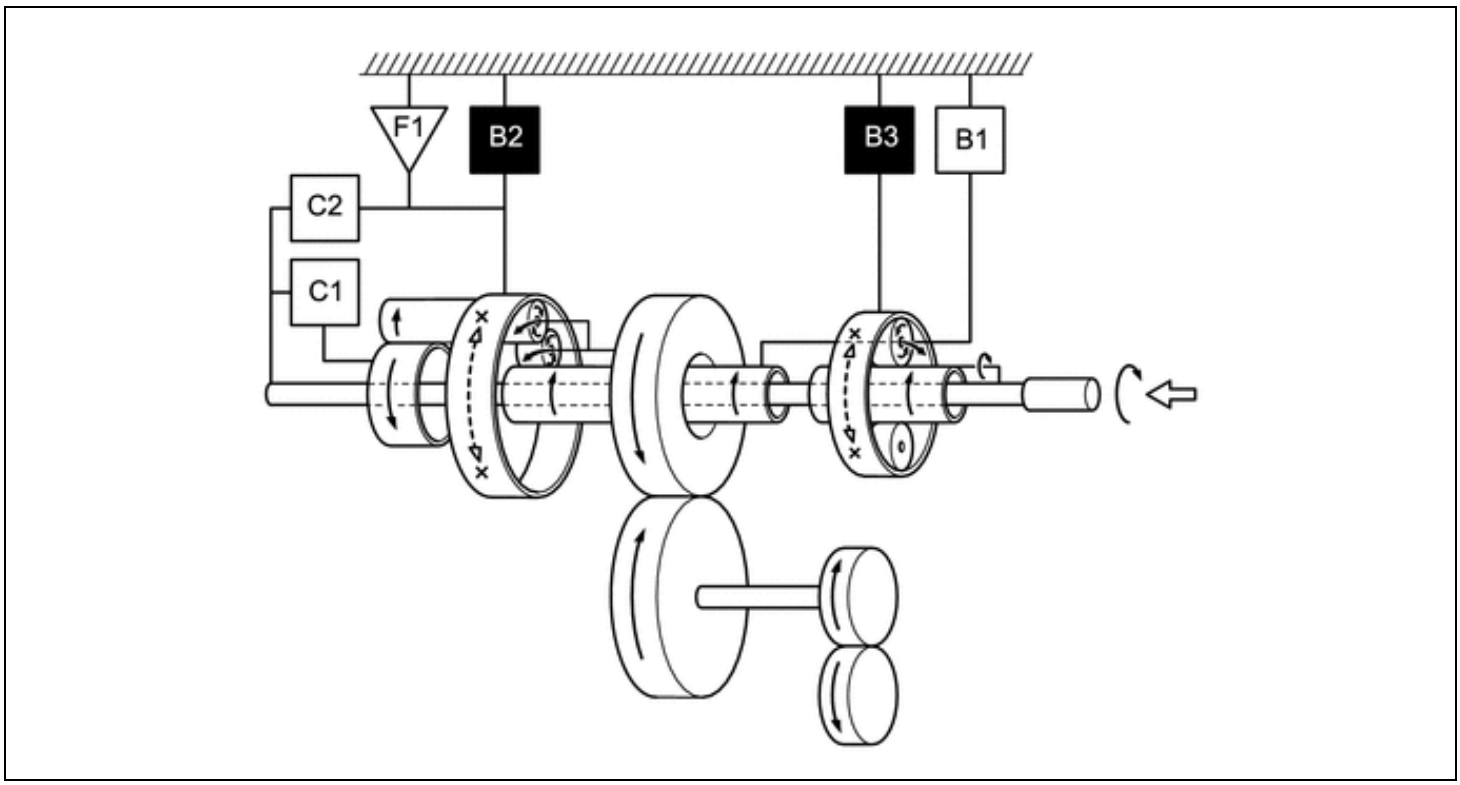


| | | | |
|---|---|---|---|
| ⇨ | Input | ■ | Operates |