| | | |
|---|---|---|
| **Last Modified:** 03-12-2013 | 6.4 F | **Doc ID:** NM1000000005H35 |
| **Model Year:** 2013 | **Model:** RAV4 | **Prod Date Range:** [12/2012 - ] |
| **Title:** EXTERIOR PANELS / TRIM: BODY STRUCTURE: RUST-RESISTANT BODY; 2013 MY RAV4 [12/2012 - ] | | |

# RUST-RESISTANT BODY

## 1. CONSTRUCTION

(a) Anti-corrosion Sheet Steel

(1) Anti-corrosion sheet steel is used as in the following illustration:

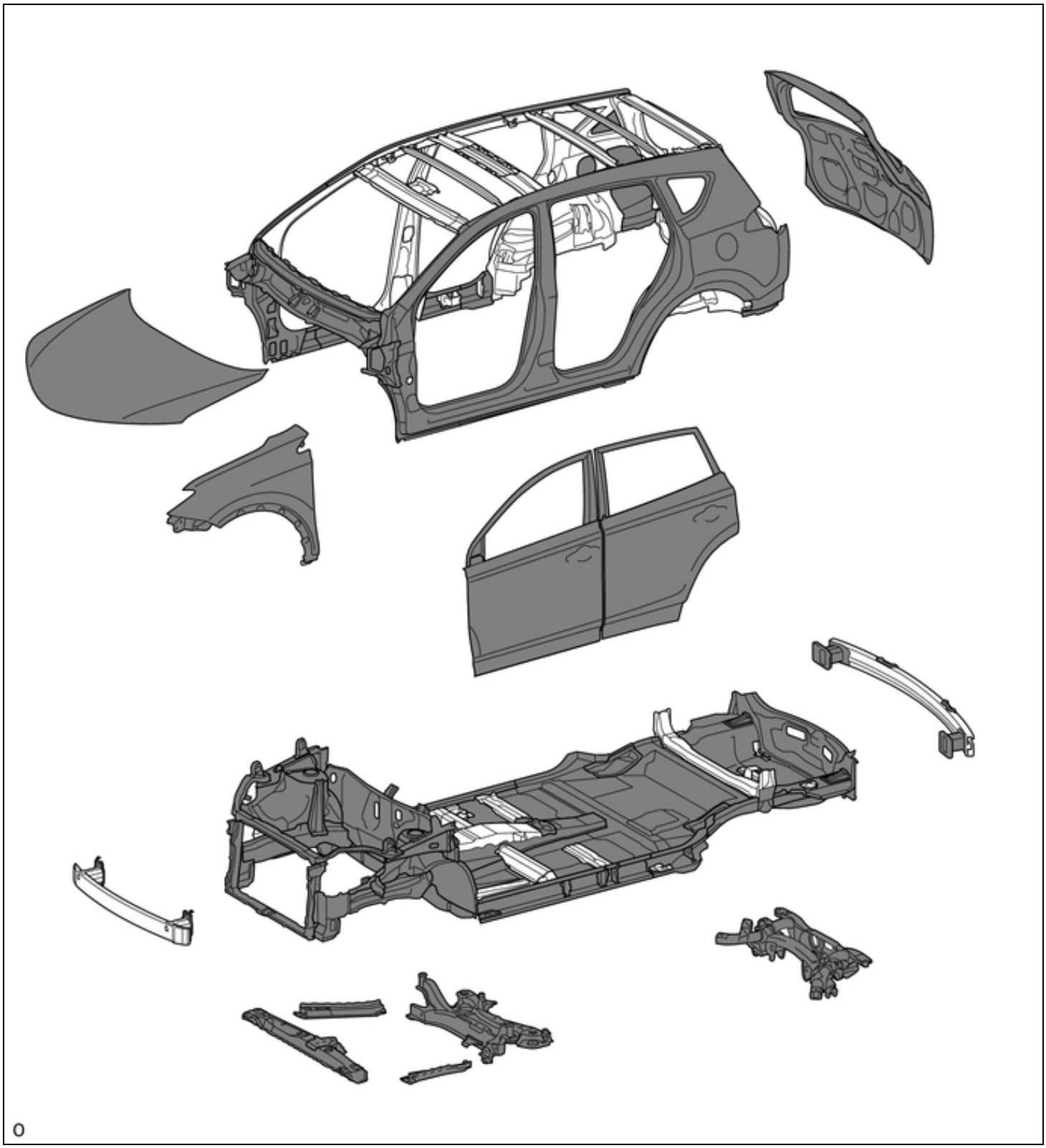


| | | | |
|---|---|---|---|
| | Anti-corrosion Sheet Steel | - | - |

(b) Anti-chipping Application and Rust-resistant Performance

(1) Chip resistant coating (soft anti-chipping primer) is applied to the leading edge of the hood to help prevent

rust.

(2) Wax is applied to the edge of the door lower portion, door hinge, fuel filler lid hinge, and the hemmed portions of the hood panel and luggage compartment door panel sub-assembly to improve rust-resistant performance.

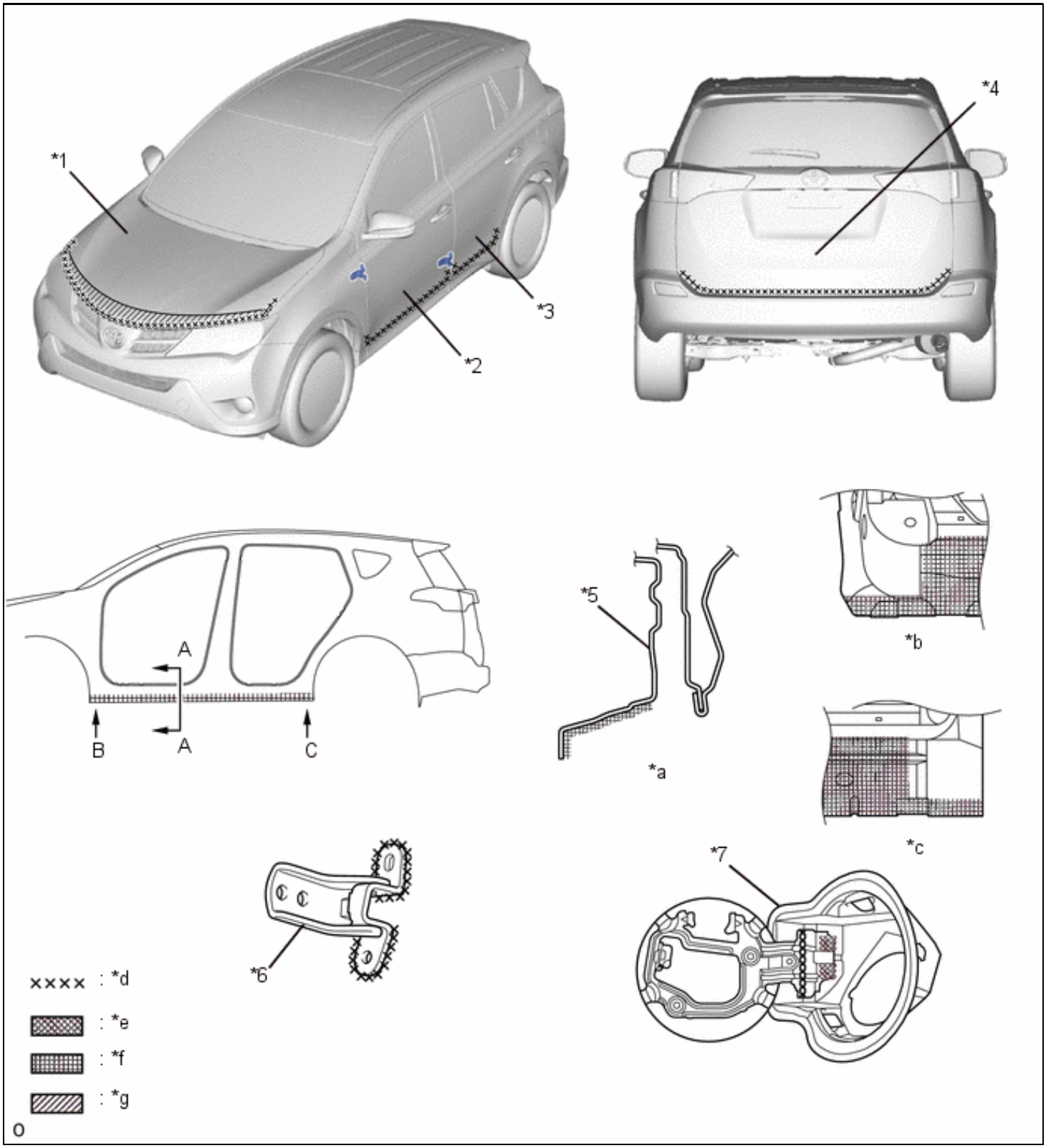


| | | | |
|---|---|---|---|
| *1 | Hood Panel | *2 | Front Door Panel Outer |
| *3 | Rear Door Panel Outer | *4 | Back Door Panel Outside |
| *5 | Side Panel Outer | *6 | Door Hinge |

| | | | |
|---|---|---|---|
| *7 | Fuel Filler Opening Lid Assembly | - | - |
| *a | A - A Cross Section | *b | View from B |
| *c | View from C | *d | Body Wax |
| *e | Hinge Wax | *f | Stone Guard Coat |
| *g | Soft Anti-chipping Primer | - | - |

(3) Polyvinyl Chloride (PVC) coating is applied to the wheel housings, and other parts that are located where they are susceptible to stone chipping damage, improving the rust-resistance of these areas.

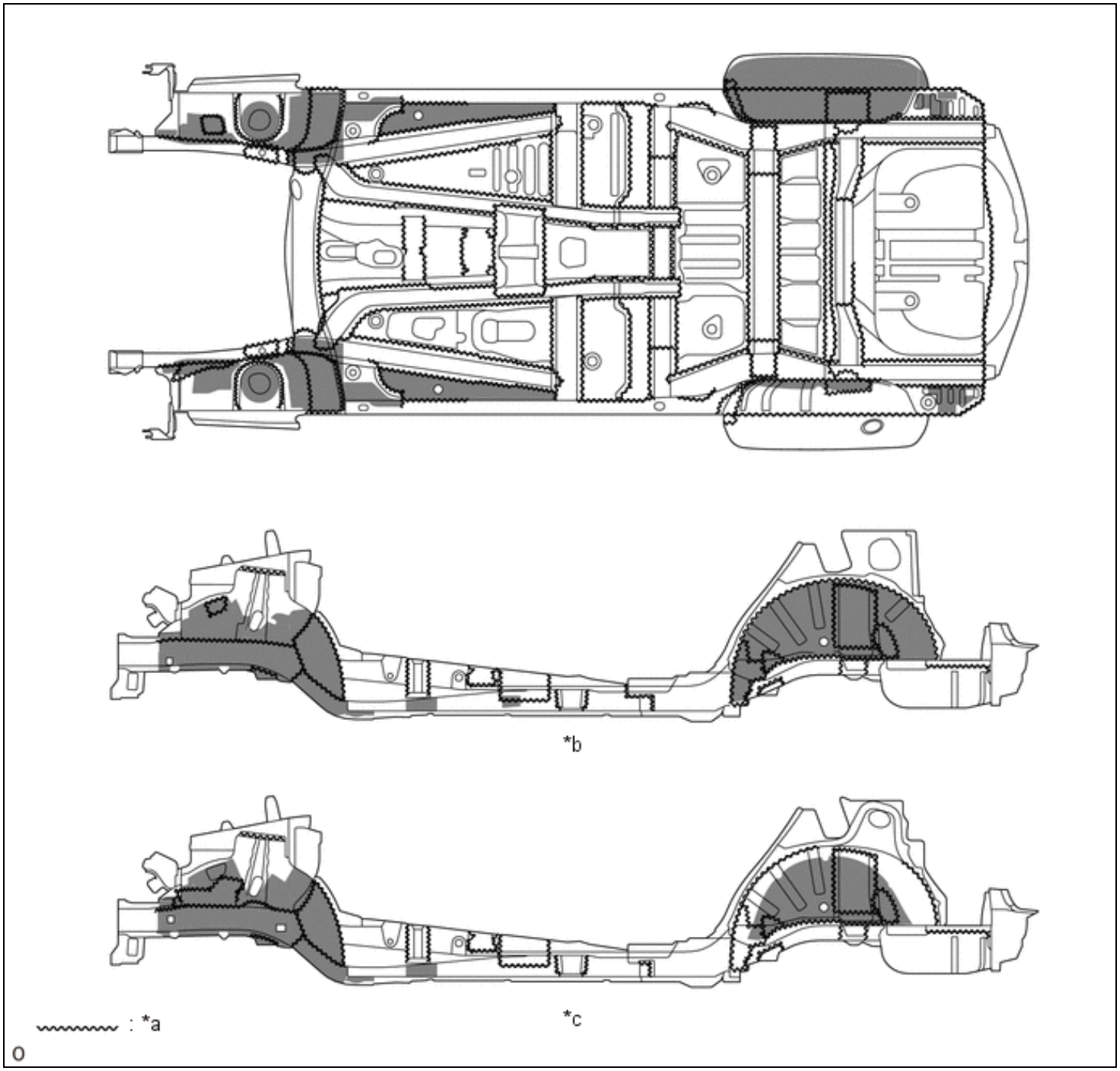


| | | | |
|---|---|---|---|
| *a | Edge Seal | *b | Right Hand Side |
| *c | Left Hand Side | - | - |
| | | | |

| | | | |
|---|---|---|---|
| | Under Coating Area | - | - |