| | | |
|---|---|---|
| **Last Modified:** 03-12-2013 | 6.4 F | **Doc ID:** NM1000000005IID |
| **Model Year:** 2013 | **Model:** RAV4 | **Prod Date Range:** [12/2012 - ] |
| **Title:** HEATING / AIR CONDITIONING: AIR CONDITIONING SYSTEM: CLEAN AIR FILTER; 2013 MY RAV4 [12/2012 - ] | | |

# CLEAN AIR FILTER

## 1. CONSTRUCTION

(a) A pollen removal type clean air filter is used to remove dust, pollen and other micron particles from air entering from outside the vehicle to provide a comfortable cabin of clean air. The clean air filter is installed in the upper section of the blower fan.

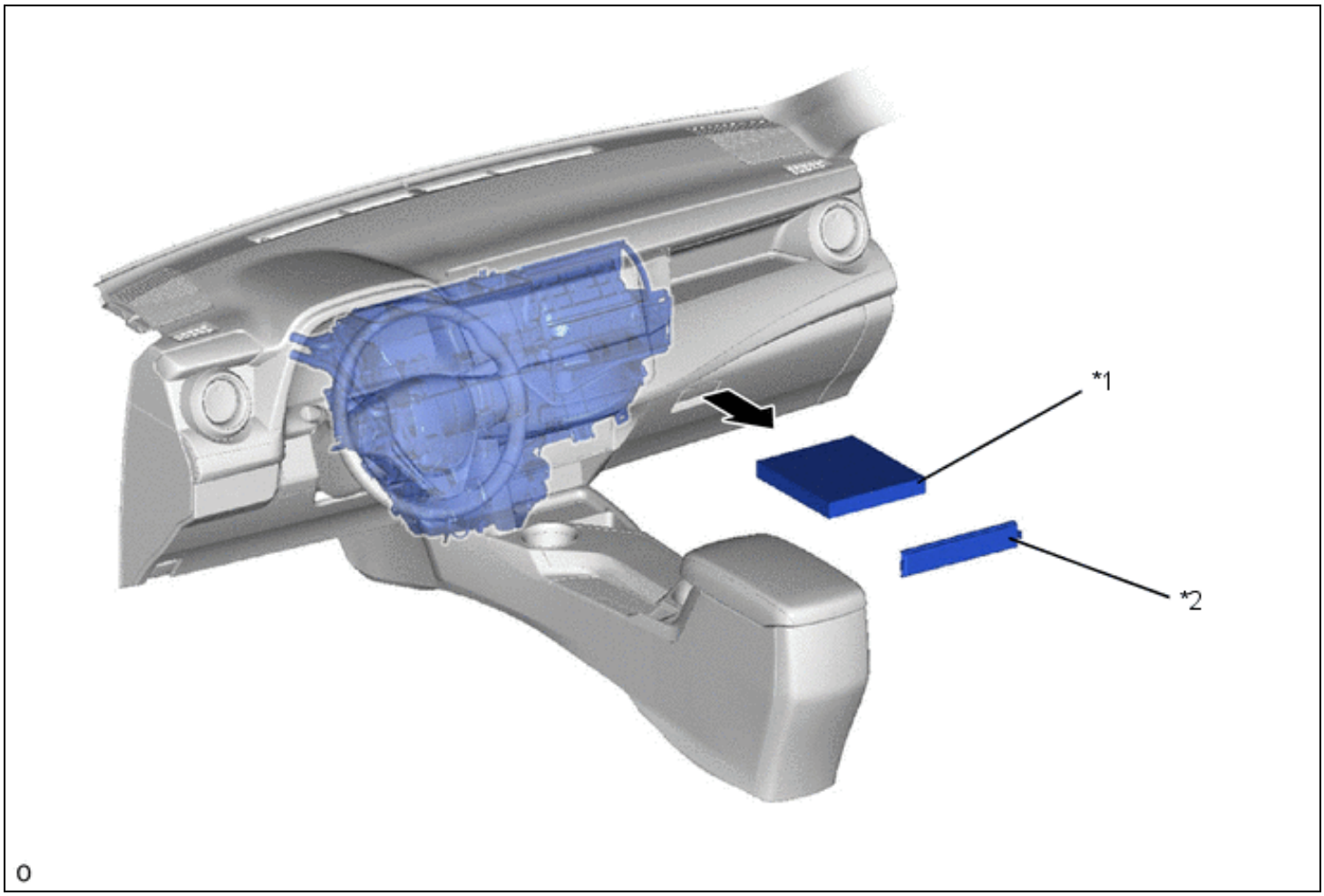


| | | | |
|---|---|---|---|
| *1 | Clean Air Filter | *2 | Case |