| | | |
|---|---|---|
| **Last Modified:** 03-12-2013 | 6.4 F | **Doc ID:** NM1000000005G14 |
| **Model Year:** 2013 | **Model:** RAV4 | **Prod Date Range:** [12/2012 - ] |
| **Title:** WINDOW / GLASS: POWER WINDOW CONTROL SYSTEM: SYSTEM DIAGRAM; 2013 MY RAV4 [12/2012 - ] | | |

# SYSTEM DIAGRAM

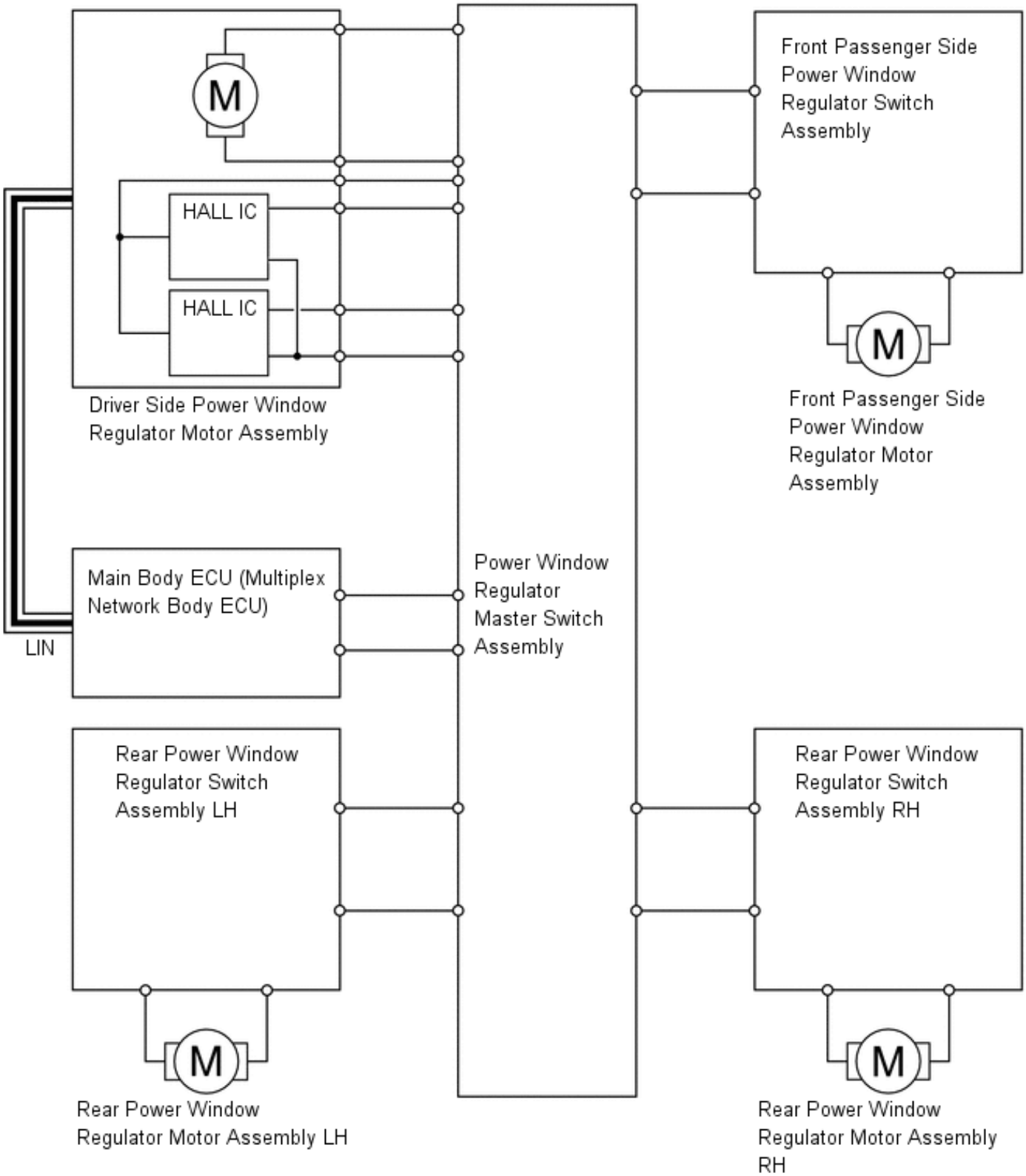
M
HALL IC
HALL IC
Driver Side Power Window Regulator Motor Assembly
Front Passenger Side Power Window Regulator Switch Assembly
M
Front Passenger Side Power Window Regulator Motor Assembly
Main Body ECU (Multiplex Network Body ECU)
LIN
Power Window Regulator Master Switch Assembly
Rear Power Window Regulator Switch Assembly LH
Rear Power Window Regulator Switch Assembly RH
M
Rear Power Window Regulator Motor Assembly LH
M
Rear Power Window Regulator Motor Assembly RH