| | | |
|---|---|---|
| **Last Modified:** 03-12-2013 | 6.4 F | **Doc ID:** NM1000000004HCW |
| **Model Year:** 2013 | **Model:** RAV4 | **Prod Date Range:** [12/2012 - ] |
| **Title:** 2AR-FE ENGINE MECHANICAL: ENGINE UNIT: VALVE LASH ADJUSTER; 2013 MY RAV4 [12/2012 - ] | | |

# VALVE LASH ADJUSTER

## 1. CONSTRUCTION

(a) The valve lash adjuster assembly, which is located at the fulcrum of the valve rocker arm sub-assembly, consists primarily of a plunger, plunger spring, check ball and check ball spring.

(b) The engine oil supplied by the cylinder head and the built-in spring actuates the valve lash adjuster assembly. The oil pressure and the spring force that act on the plunger push the valve rocker arm sub-assembly against the cam, in order to adjust the valve clearance that is created during the opening and closing of the valve. As a result, engine noise has been reduced.

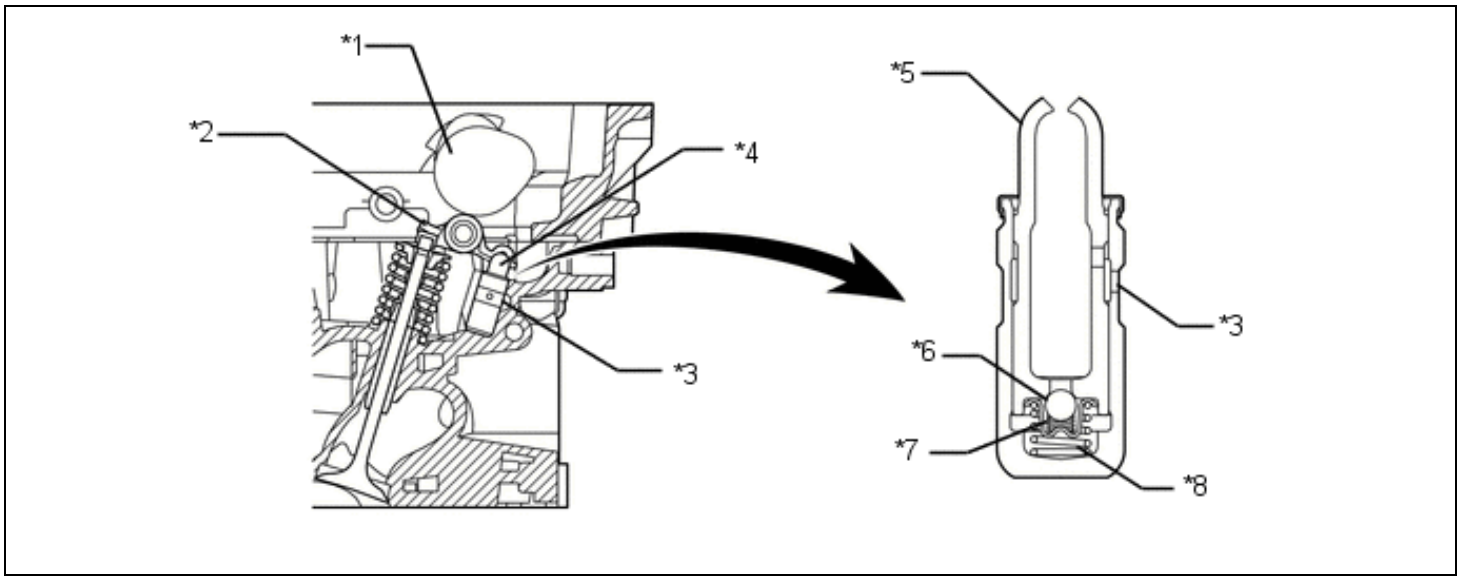


| | | | |
|---|---|---|---|
| *1 | Cam | *2 | Valve Rocker Arm Sub-assembly |
| *3 | Oil Passage | *4 | Valve Lash Adjuster Assembly |
| *5 | Plunger | *6 | Check Ball |
| *7 | Check Ball Spring | *8 | Plunger Spring |