| | | |
|---|---|---|
| **Last Modified:** 03-12-2013 | 6.4 F | **Doc ID:** NM1000000005IIS |
| **Model Year:** 2013 | **Model:** RAV4 | **Prod Date Range:** [12/2012 - ] |
| **Title:** METER / GAUGE / DISPLAY: METER / GAUGE SYSTEM: PARTS LOCATION; 2013 MY RAV4 [12/2012 - ] | | |

# PARTS LOCATION

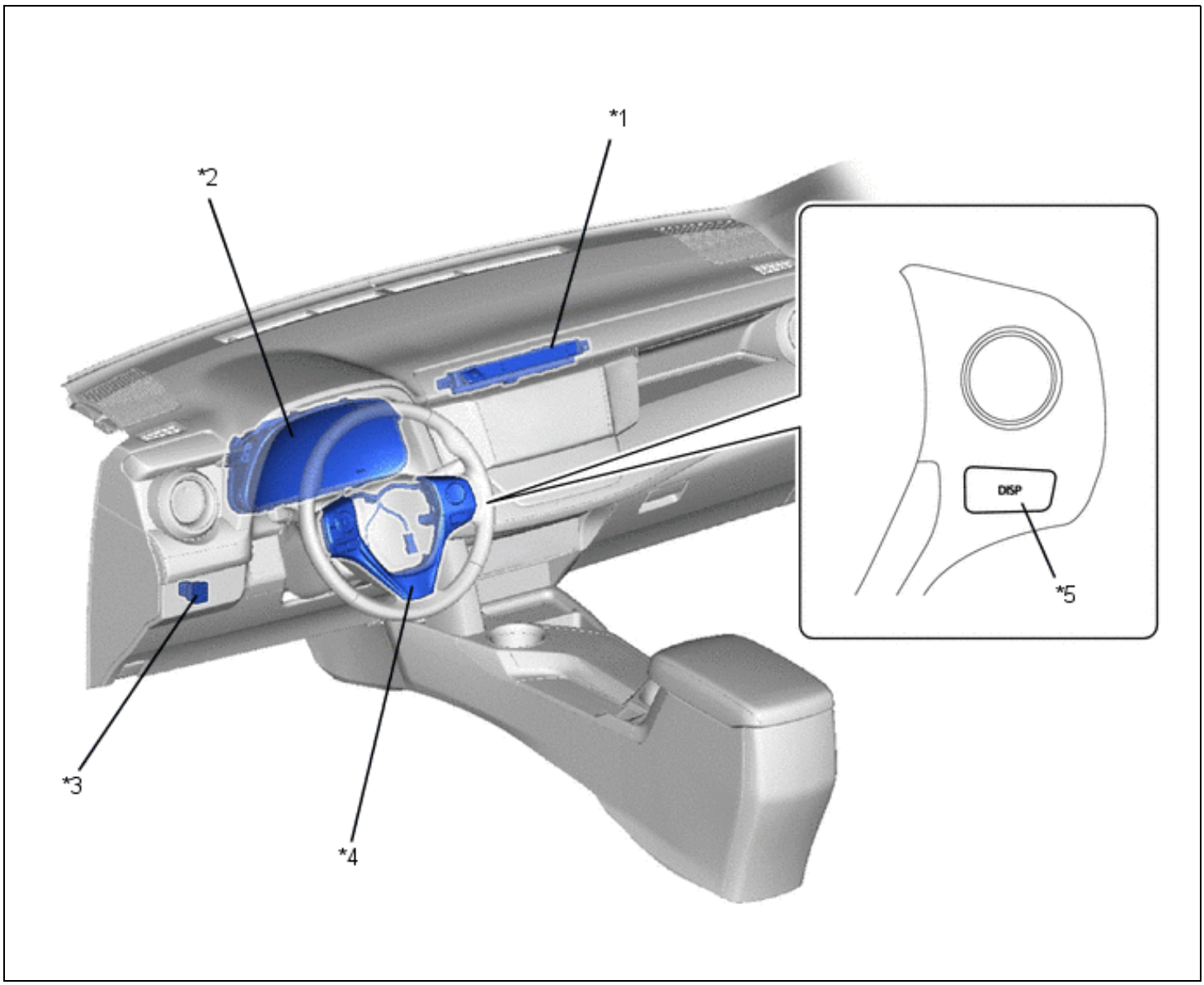


| | | | |
|---|---|---|---|
| *1 | Telltale Light Assembly | *2 | Combination Meter Assembly |
| *3 | Light Control Rheostat | *4 | Steering Pad Switch Assembly |
| *5 | DISP Switch | - | - |