| | | |
|---|---|---|
| **Last Modified:** 03-12-2013 | 6.4 F | **Doc ID:** NM1000000005IHZ |
| **Model Year:** 2013 | **Model:** RAV4 | **Prod Date Range:** [12/2012 - ] |
| **Title:** LIGHTING (EXT): LIGHTING SYSTEM: LANE DEPARTURE WARNING CAMERA; 2013 MY RAV4 [12/2012 - ] | | |

# LANE DEPARTURE WARNING CAMERA

## 1. CONSTRUCTION

(a) The lane departure warning camera is mounted near the map light assembly and is used for the lane departure alert system and automatic high beam system.

(b) The lane departure warning camera consists of a Complementary Metal Oxide Semiconductor (CMOS) that receives images and the top of the windshield glass that identifies light sources, and judges whether to turn high beam headlights on or off.

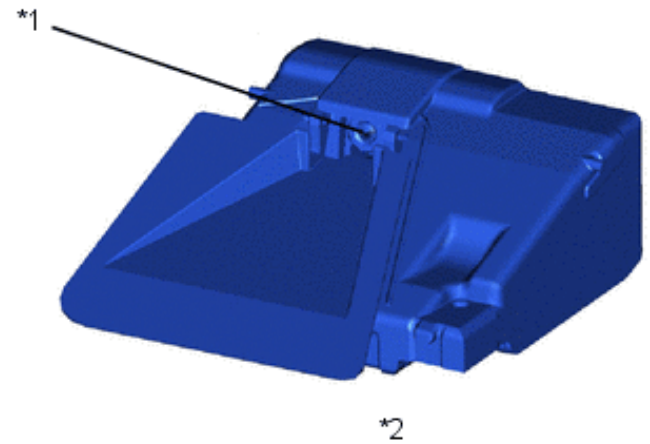


| | | | |
|---|---|---|---|
| *1 | Lens Portion | *2 | Lane Departure Warning Camera |