| | | |
|---|---|---|
| **Last Modified:** 03-12-2013 | 6.4 F | **Doc ID:** NM1000000005II8 |
| **Model Year:** 2013 | **Model:** RAV4 | **Prod Date Range:** [12/2012 - ] |
| **Title:** HEATING / AIR CONDITIONING: AIR CONDITIONING SYSTEM: HEATER RADIATOR UNIT; 2013 MY RAV4 [12/2012 - ] | | |

# HEATER RADIATOR UNIT

## 1. CONSTRUCTION

(a) This heater radiator unit sub-assembly has been made compact and performance has been improved by making the core section finer and improving the shapes of the tank section and flow section. Also, environmental concerns have been taken into consideration. By using aluminum as the material, the amount of the environmental burden disposal (lead) has been reduced.

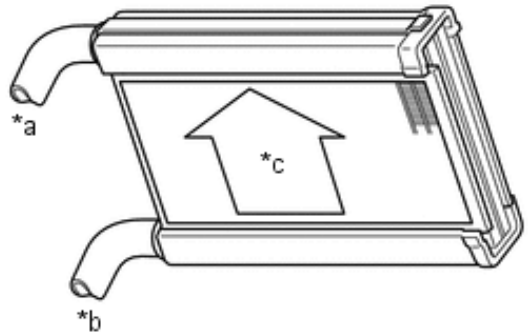


| | | | |
|---|---|---|---|
| *a | Out | *b | In |
| *c | Engine Coolant Flow | - | - |