| | | |
|---|---|---|
| **Last Modified:** 03-12-2013 | 6.4 F | **Doc ID:** NM1000000004HDC |
| **Model Year:** 2013 | **Model:** RAV4 | **Prod Date Range:** [12/2012 - ] |
| **Title:** 2AR-FE EMISSION CONTROL: EMISSION CONTROL SYSTEM: FUEL INLET (FRESH AIR INLET); 2013 MY RAV4 [12/2012 - ] | | |

# FUEL INLET (FRESH AIR INLET)

## 1. CONSTRUCTION

(a) The fresh air line inlet is located near the fuel inlet pipe opening. The fresh air from the atmosphere and the drain air cleaned by the charcoal canister assembly will go in or out of the system through the passages shown below:

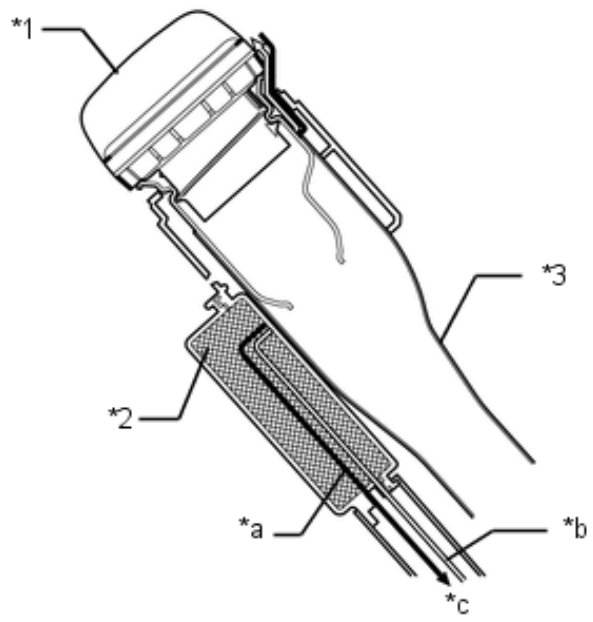


| | | | |
|---|---|---|---|
| *1 | Fuel Tank Cap Assembly | *2 | No. 1 Charcoal Canister Filter |
| *3 | Fuel Inlet Pipe | - | - |
| *a | Fresh Air | *b | Cleaned Drain Air |
| *c | To Charcoal Canister Assembly | - | - |