| | | |
|---|---|---|
| **Last Modified:** 03-12-2013 | 6.4 F | **Doc ID:** NM1000000005Q6Q |
| **Model Year:** 2013 | **Model:** RAV4 | **Prod Date Range:** [12/2012 - ] |
| **Title:** U760F AUTOMATIC TRANSMISSION / TRANSAXLE: AUTOMATIC TRANSAXLE SYSTEM: TORQUE CONVERTER; 2013 MY RAV4 [12/2012 - ] | | |

# TORQUE CONVERTER

## 1. CONSTRUCTION

(a) A compact, lightweight and high-capacity torque converter is used.

(b) This torque converter has optimally designed impeller configuration and fluid passages, resulting in substantially enhanced transmission efficiency to ensure good starting, acceleration and fuel economy.

(c) Furthermore, a hydraulically-operated lock-up mechanism, which cuts power transmission losses caused by slippage at medium and high speeds, is used.

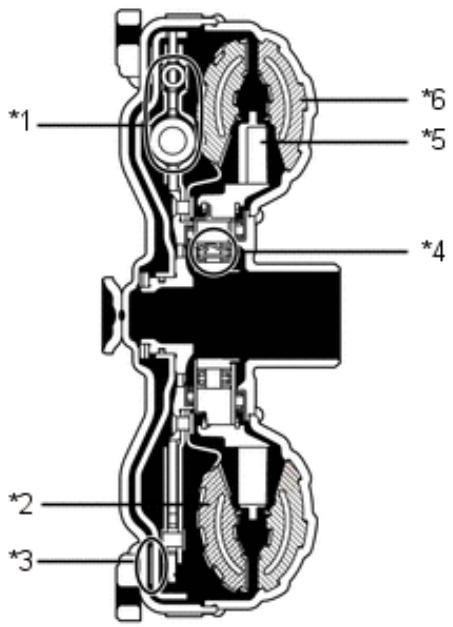


| | | | |
|---|---|---|---|
| *1 | Lock-up Damper | *2 | Turbine Runner |
| *3 | Lock-up Clutch | *4 | 1-way Clutch |
| *5 | Stator | *6 | Pump Impeller |