| | | |
|---|---|---|
| **Last Modified:** 03-12-2013 | 6.4 F | **Doc ID:** NM1000000004HC1 |
| **Model Year:** 2013 | **Model:** RAV4 | **Prod Date Range:** [12/2012 - ] |
| **Title:** 2AR-FE ENGINE CONTROL: SFI SYSTEM: SPARK PLUG; 2013 MY RAV4 [12/2012 - ] | | |

# SPARK PLUG

## 1. CONSTRUCTION

(a) Long-reach type iridium-tipped spark plugs are used to improve ignition performance while maintaining the same durability as platinum-tipped spark plugs.

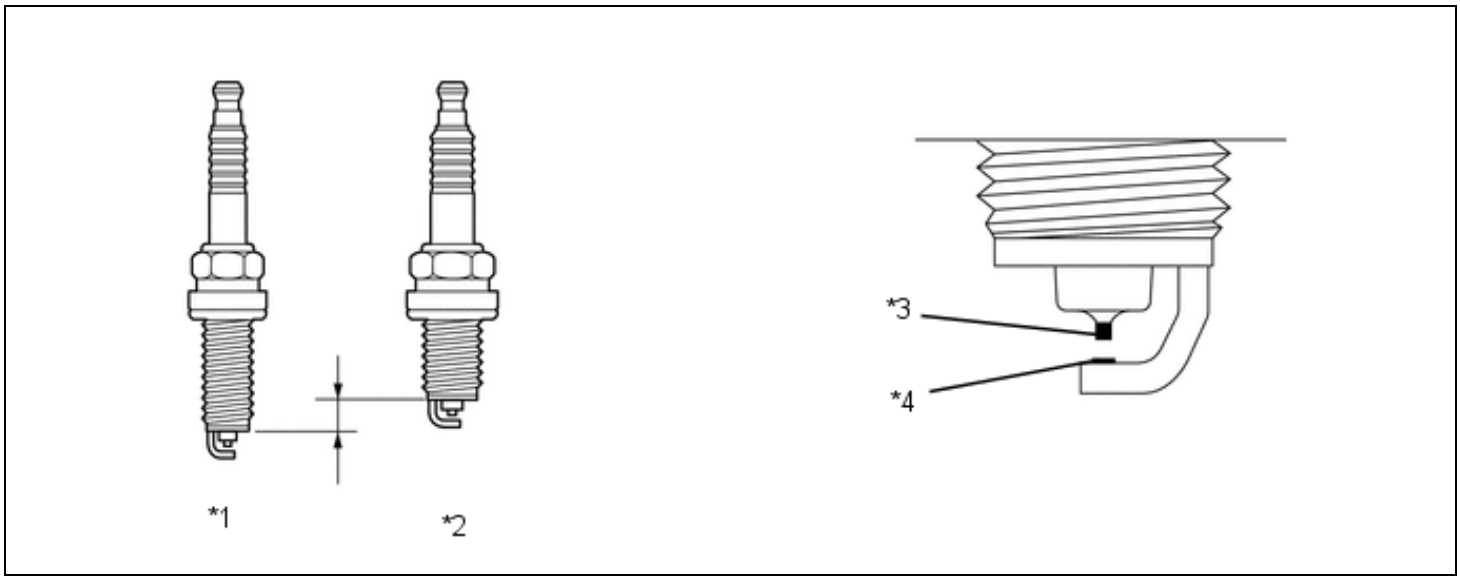


| | | | |
|---|---|---|---|
| *1 | Long-reach Type Spark Plug | *2 | Conventional Type Spark Plug |
| *3 | Iridium Tip | *4 | Platinum Tip |