| | | |
|---|---|---|
| **Last Modified:** 03-12-2013 | 6.4 F | **Doc ID:** NM1000000004HD6 |
| **Model Year:** 2013 | **Model:** RAV4 | **Prod Date Range:** [12/2012 - ] |
| **Title:** 2AR-FE FUEL: FUEL SYSTEM: FUEL INJECTOR; 2013 MY RAV4 [12/2012 - ] | | |

# FUEL INJECTOR

## 1. CONSTRUCTION

(a) A long nozzle type fuel injector assembly is used. This injector has 12 injection holes.

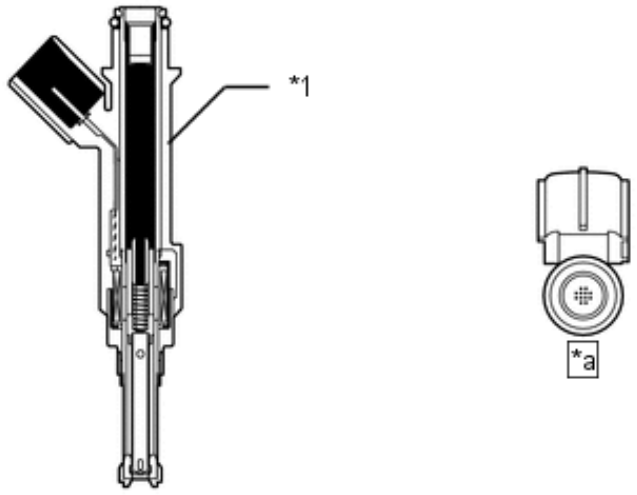


| | | | |
|---|---|---|---|
| *1 | Fuel Injector Assembly | - | - |
| *a | View from Bottom Side | - | - |