| | | |
|---|---|---|
| **Last Modified:** 03-12-2013 | 6.4 F | **Doc ID:** NM1000000005Q7A |
| **Model Year:** 2013 | **Model:** RAV4 | **Prod Date Range:** [12/2012 - ] |
| **Title:** U760F AUTOMATIC TRANSMISSION / TRANSAXLE: SHIFT LOCK SYSTEM: SYSTEM DIAGRAM; 2013 MY RAV4 [12/2012 - ] | | |
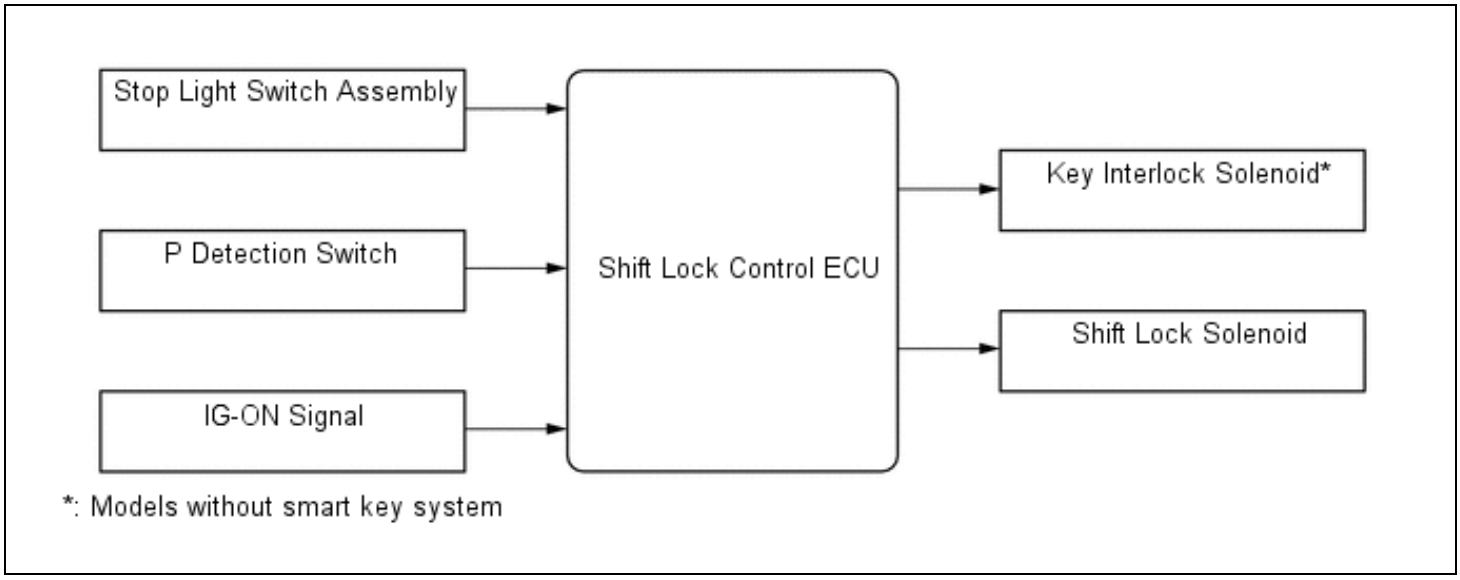
# SYSTEM DIAGRAM