| | | |
|---|---|---|
| **Last Modified:** 03-12-2013 | 6.4 F | **Doc ID:** NM1000000004HCT |
| **Model Year:** 2013 | **Model:** RAV4 | **Prod Date Range:** [12/2012 - ] |
| **Title:** 2AR-FE ENGINE MECHANICAL: ENGINE UNIT: BALANCE SHAFT; 2013 MY RAV4 [12/2012 - ] | | |

# BALANCE SHAFT

## 1. CONSTRUCTION

(a) A balance shaft is used to reduce vibrations.

(b) The crankshaft directly drives the No. 1 balance shaft.

(c) In addition, a resin gear is used on the driven side to suppress noise and offer lightweight design.

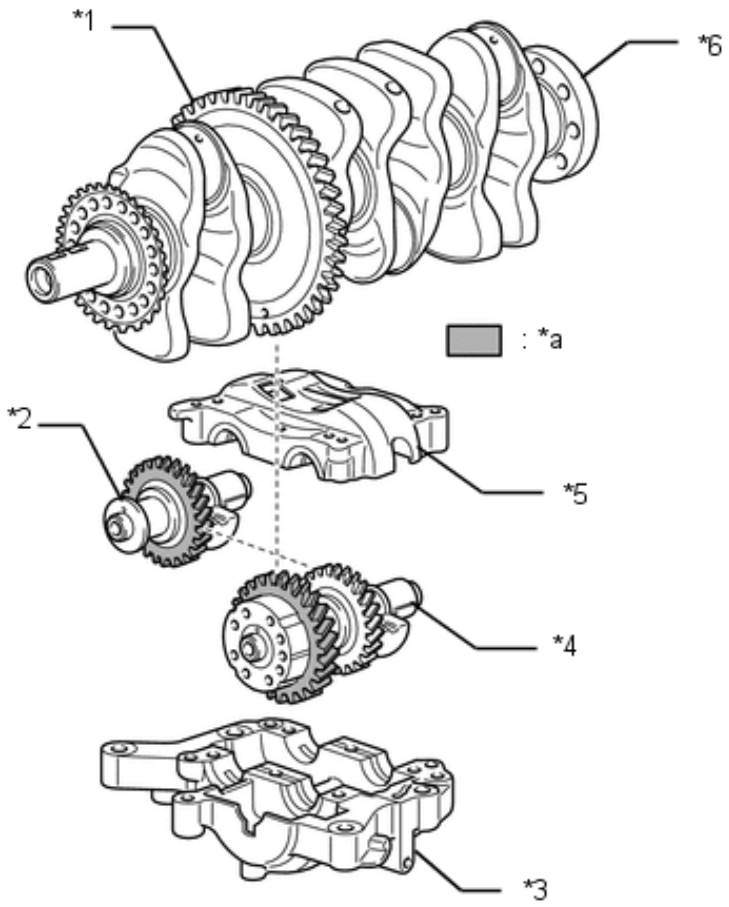


| | | | |
|---|---|---|---|
| *1 | Balance Shaft Drive Gear | *2 | No. 2 Balance Shaft |
| *3 | No. 1 Balance Shaft Housing | *4 | No. 1 Balance Shaft |
| *5 | No. 2 Balance Shaft Housing | *6 | Crankshaft |
| *a | Resin Gear | - | - |

## 2. OPERATION

(a) In the in-line 4-cylinder engine, the crankshaft angle for the No. 1 and No. 4 cylinders are at the exact opposite (180°) positions of the No. 2 and No. 3 cylinders. Therefore, the inertial force of the pistons and the connecting rods of the former 2 cylinders and of the latter 2 cylinders almost cancel each other out. However, because the position at which the piston reaches its maximum speed is located toward the top dead center from the center of the stroke, the upward inertial force is greater than the downward inertial force. This

unbalanced secondary inertial force is generated twice for each rotation of the crankshaft.

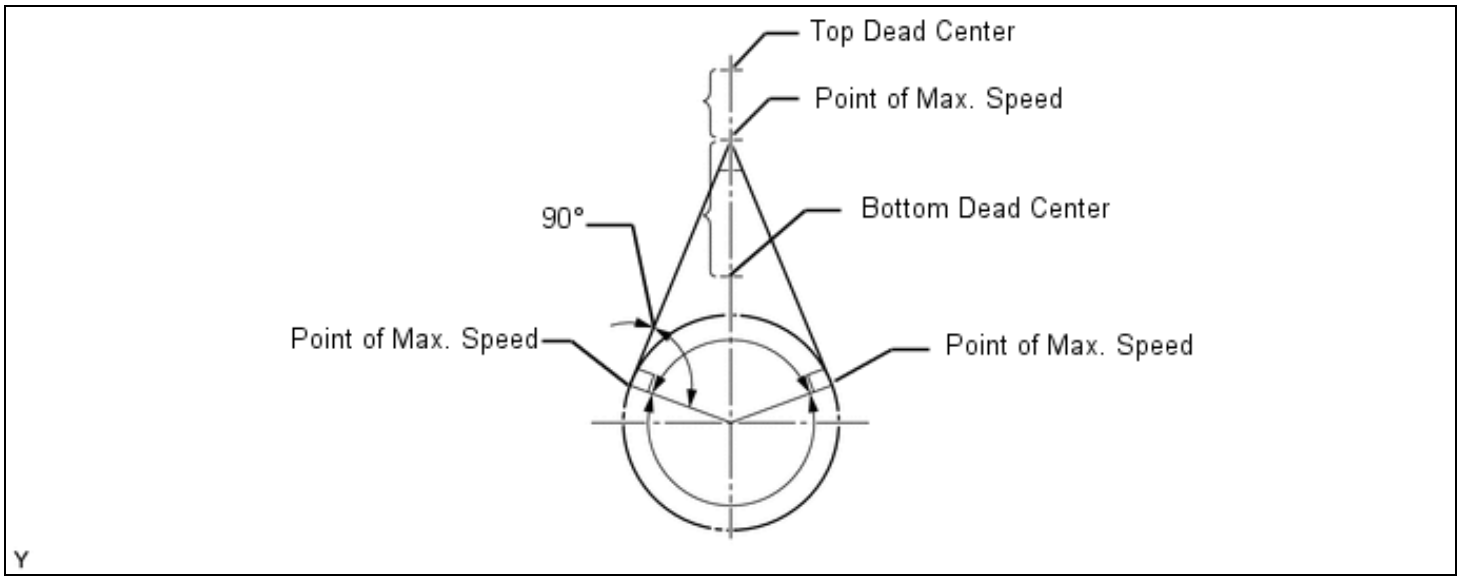


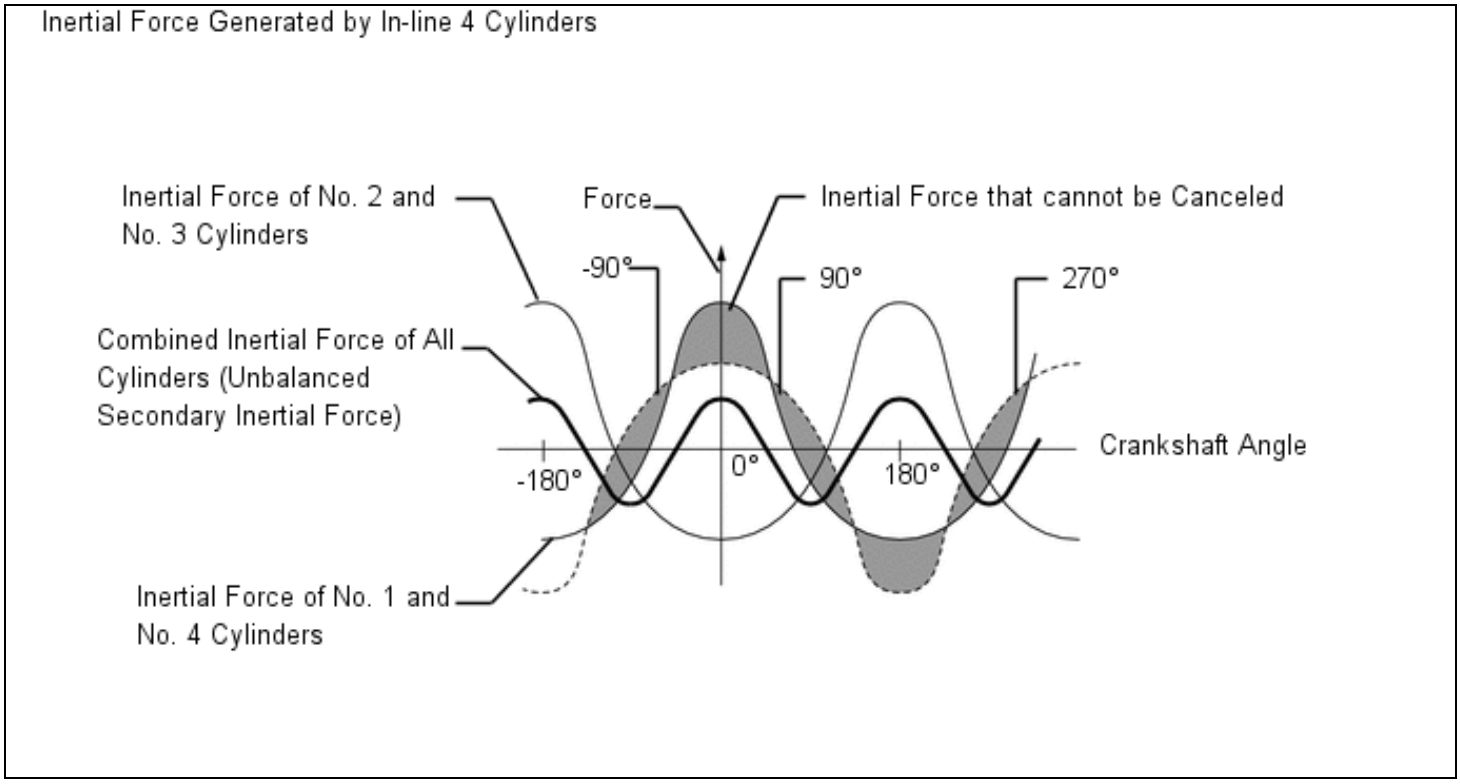


(b) To cancel the unbalanced secondary inertial force, 2 balance shafts are rotated twice for each rotation of the crankshaft and generate inertial force in the opposite direction. Also, in order to cancel the inertial force generated by the balance shaft itself, the balance shaft actually consists of 2 shafts rotating in opposite directions.

Mass Direction of Balance Shaft at Crankshaft Angle

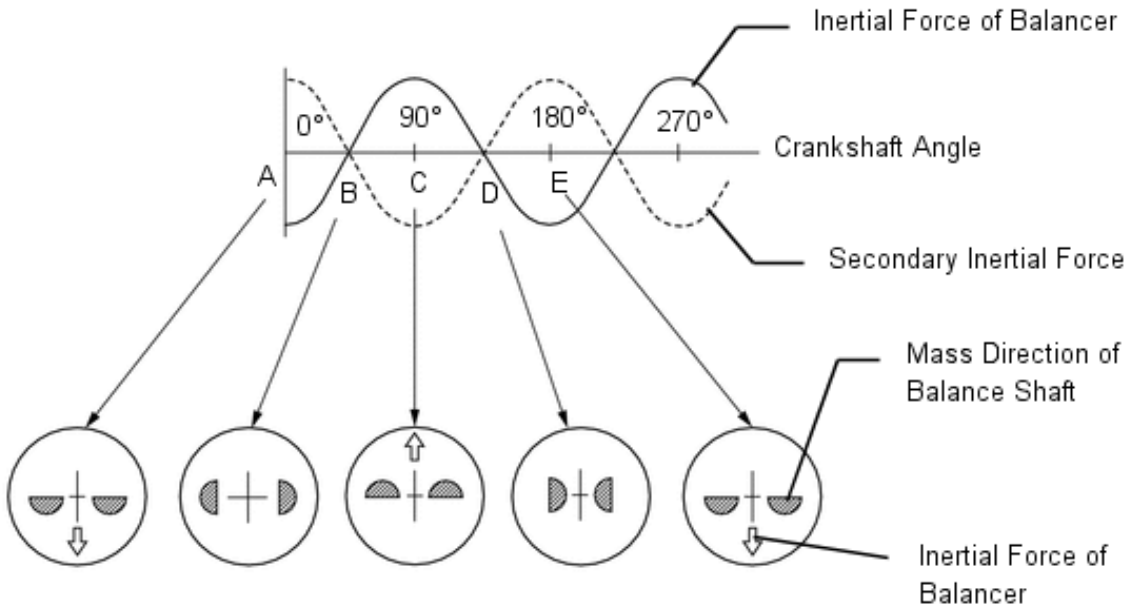
Inertial Force of Balancer
0°
90°
180°
270°
Crankshaft Angle
A
B
C
D
E
Secondary Inertial Force
Mass Direction of Balance Shaft
Inertial Force of Balancer