| | | |
|---|---|---|
| **Last Modified:** 03-12-2013 | 6.4 F | **Doc ID:** NM1000000005Q77 |
| **Model Year:** 2013 | **Model:** RAV4 | **Prod Date Range:** [12/2012 - ] |
| **Title:** U760F AUTOMATIC TRANSMISSION / TRANSAXLE: AUTOMATIC TRANSAXLE SYSTEM: PARTS LOCATION; 2013 MY RAV4 [12/2012 - ] | | |

# PARTS LOCATION

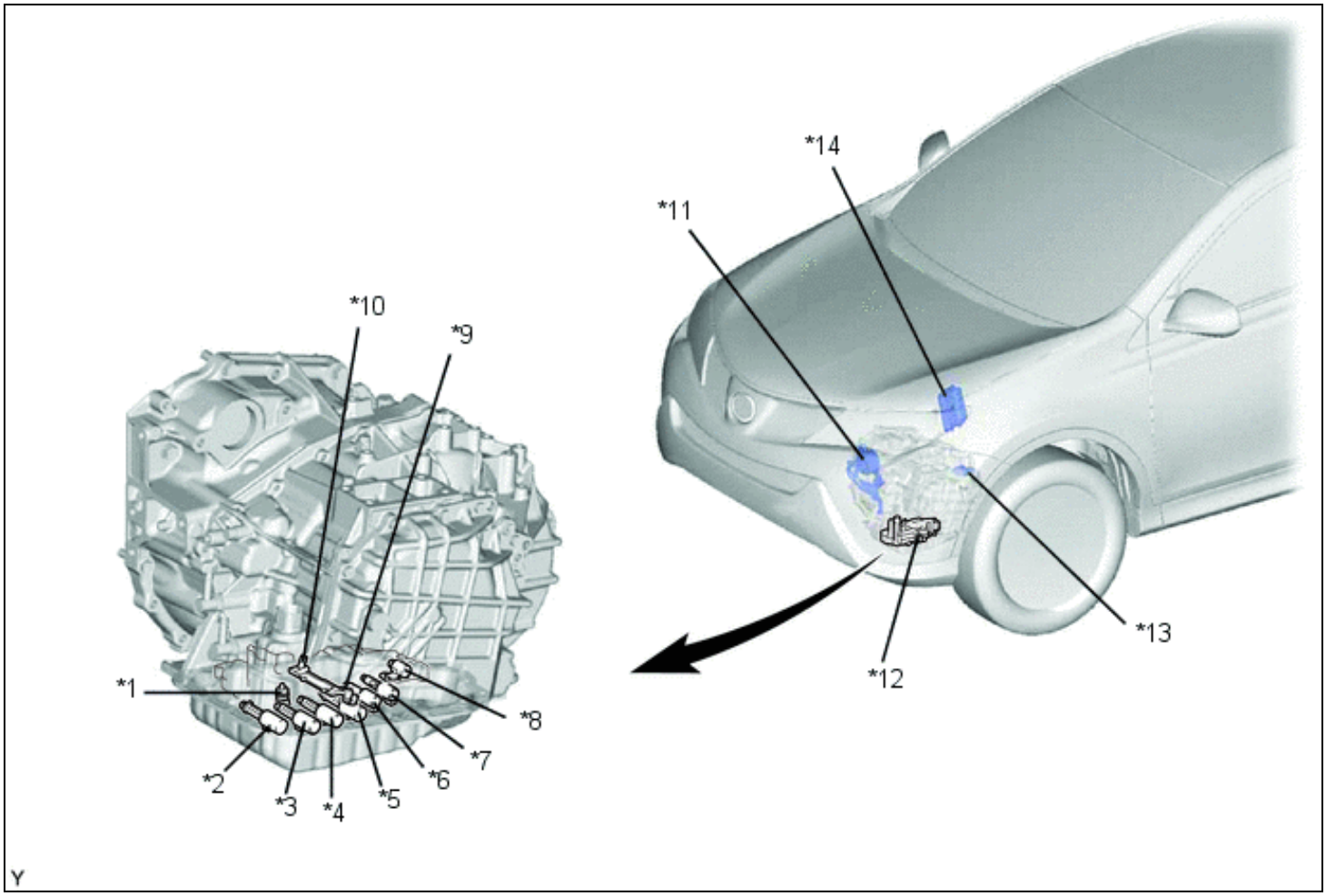


| | | | |
|---|---|---|---|
| *1 | ATF Temperature Sensor | *2 | Shift Solenoid Valve SL4 |
| *3 | Shift Solenoid Valve SL3 | *4 | Shift Solenoid Valve SL1 |
| *5 | Shift Solenoid Valve SL2 | *6 | Shift Solenoid Valve SLU |
| *7 | Shift Solenoid Valve SLT | *8 | Shift Solenoid Valve SL |
| *9 | Input Turbine Speed Sensor | *10 | Counter Gear Speed Sensor |
| *11 | ATF Warmer (Transmission Oil Cooler) | *12 | Valve Body Unit |
| *13 | Park/Neutral Position Switch Assembly | *14 | ECM |

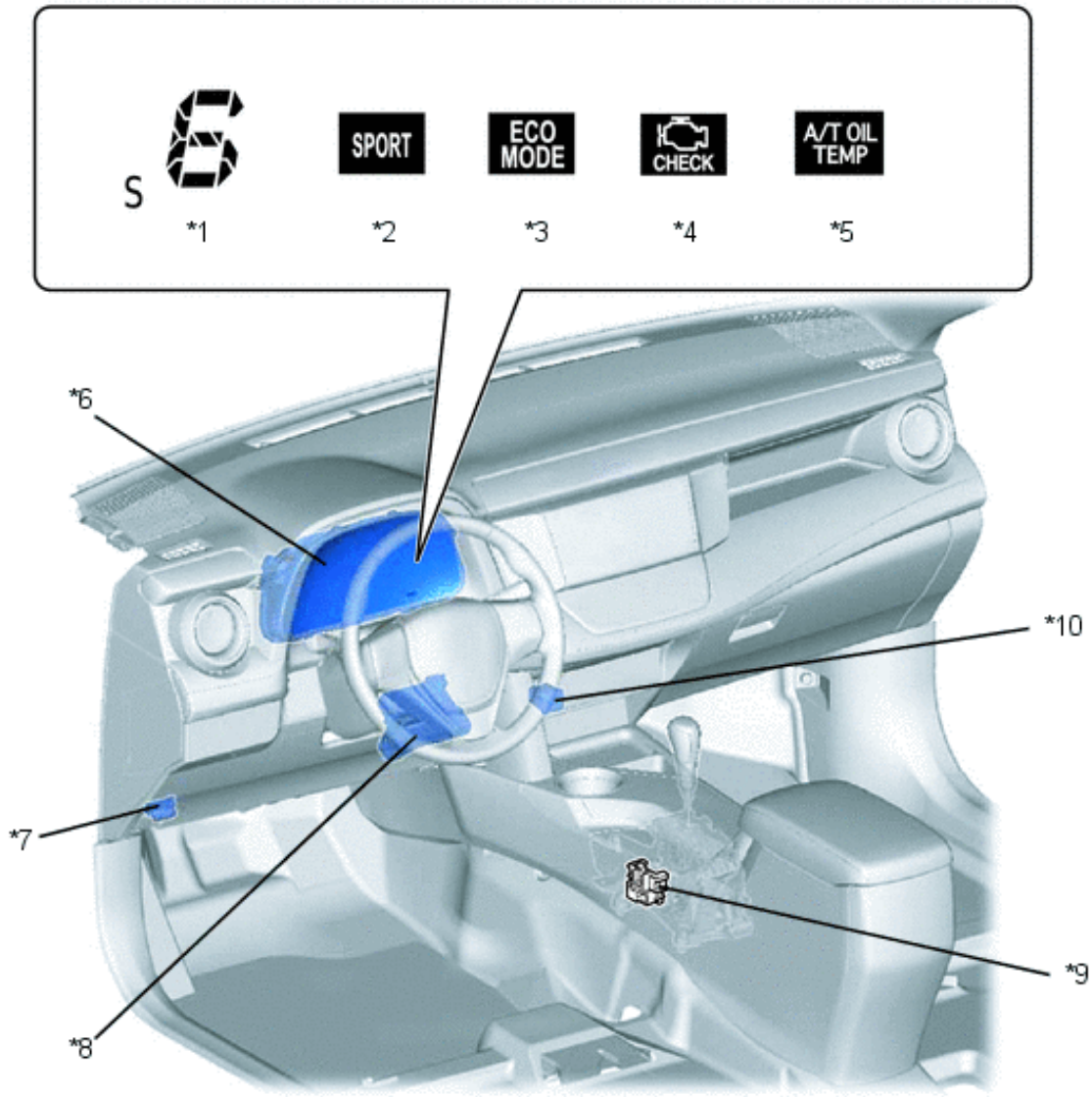


| | | | |
|---|---|---|---|
| *1 | Shift Position and Shift Range Display | *2 | Sport Mode Indicator Light |
| *3 | ECO Mode Indicator Light | *4 | MIL |
| *5 | ATF Temperature Warning Light | *6 | Combination Meter Assembly<br>• Buzzer |
| *7 | DLC3 | *8 | Air Conditioning Amplifier Assembly |
| *9 | Transmission Control Switch | *10 | Combination Switch Assembly<br>• Sport Mode Switch<br>• ECO Mode Switch |