| | | |
|---|---|---|
| **Last Modified:** 03-12-2013 | 6.4 F | **Doc ID:** NM1000000005IJ5 |
| **Model Year:** 2013 | **Model:** RAV4 | **Prod Date Range:** [12/2012 - ] |
| **Title:** CRUISE CONTROL: LANE DEPARTURE ALERT SYSTEM: PARTS LOCATION; 2013 MY RAV4 [12/2012 - ] | | |

# PARTS LOCATION

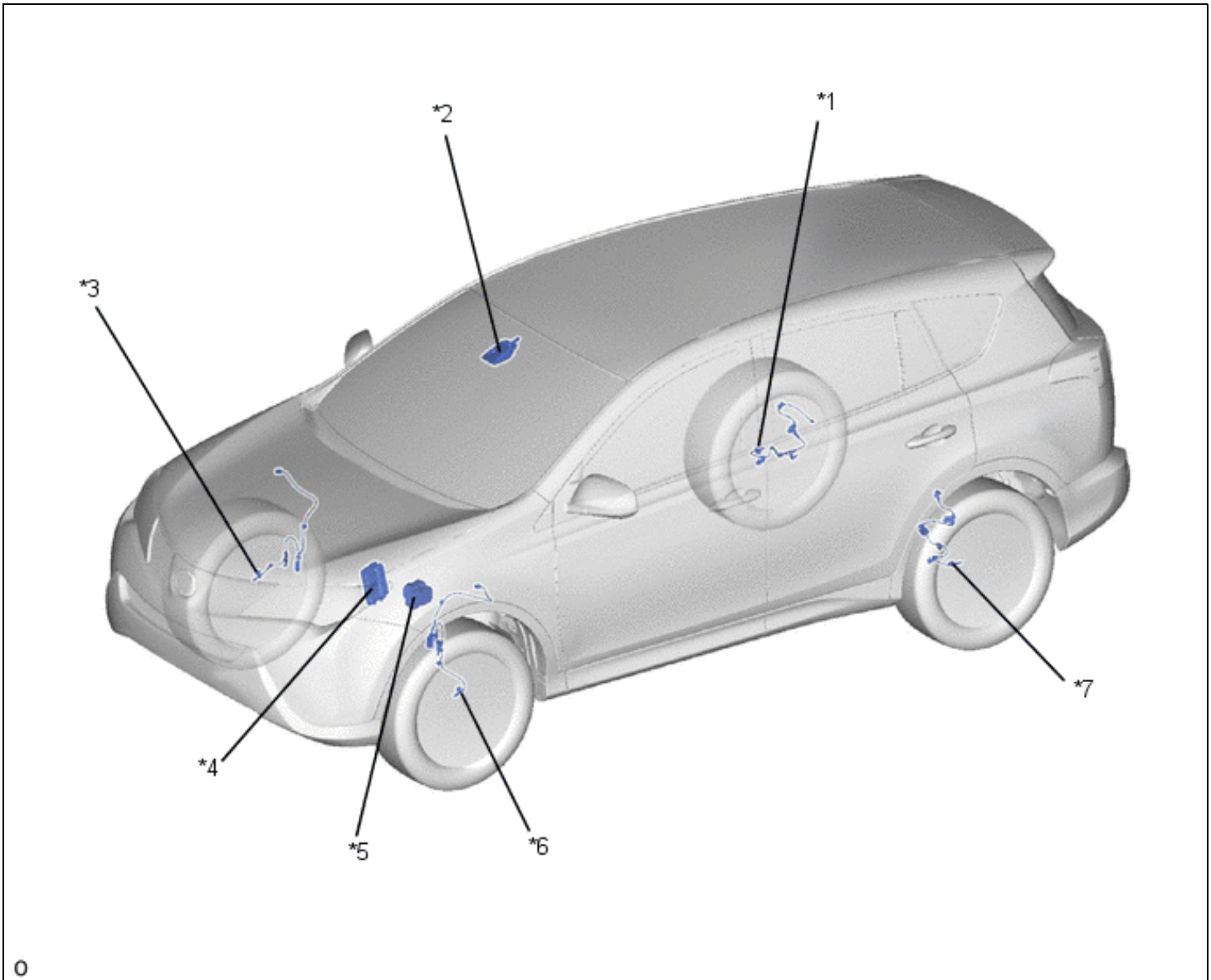


| | | | |
|---|---|---|---|
| *1 | Rear Speed Sensor RH | *2 | Lane Departure Warning Camera |
| *3 | Front Speed Sensor RH | *4 | ECM |
| *5 | Brake Actuator Assembly<br>• Skid Control ECU | *6 | Front Speed Sensor LH |
| *7 | Rear Speed Sensor LH | - | - |

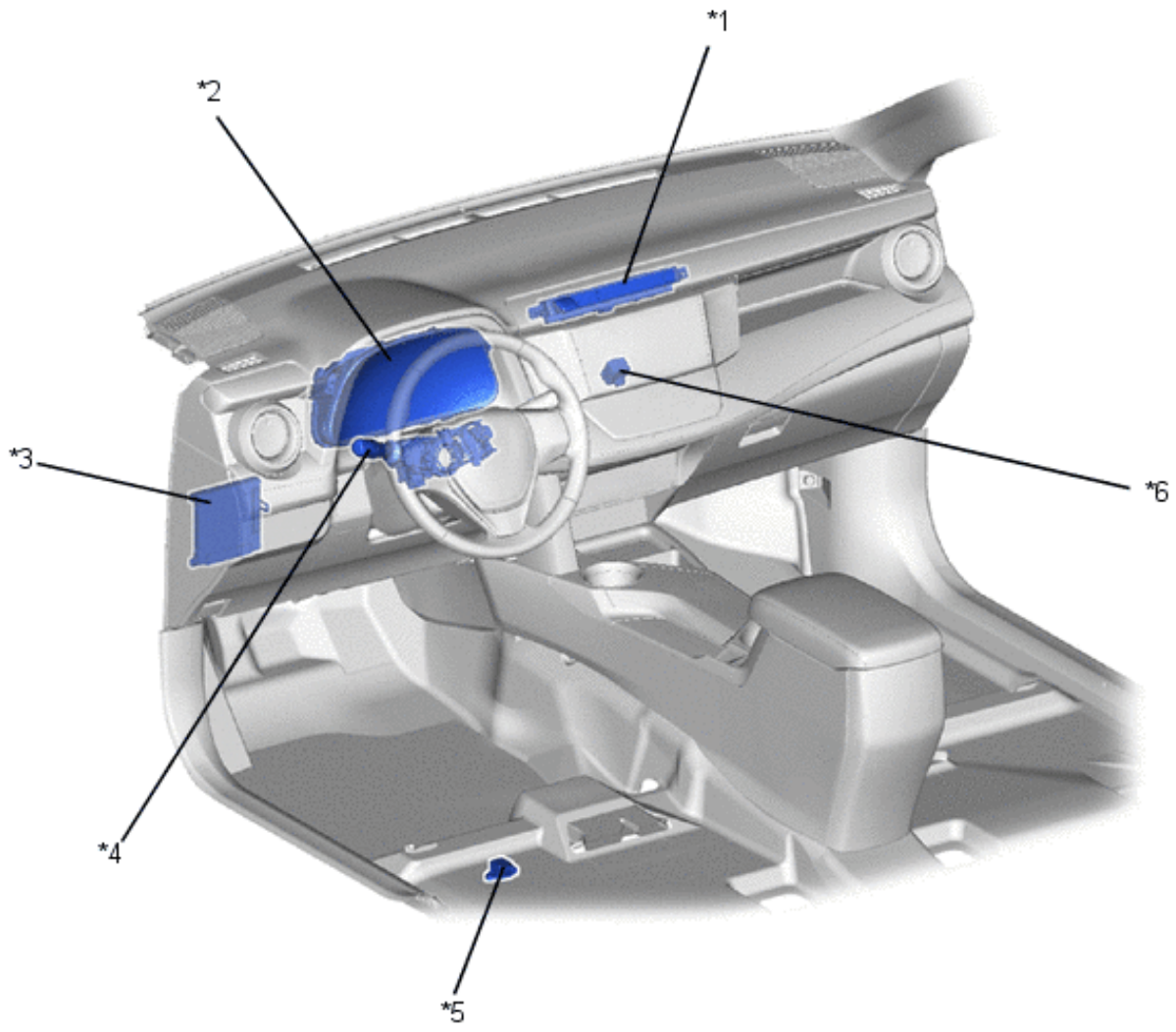


| | | | |
|---|---|---|---|
| *1 | Telltale Light Assembly<br>• LDA Main Switch | *2 | Combination Meter Assembly |
| *3 | Main Body ECU (Multiplex Network Body ECU) | *4 | Headlight Dimmer Switch Assembly |
| *5 | Yawrate Sensor | *6 | Skid Control Buzzer Assembly |