| | | |
|---|---|---|
| **Last Modified:** 03-12-2013 | 6.4 F | **Doc ID:** NM1000000005IIE |
| **Model Year:** 2013 | **Model:** RAV4 | **Prod Date Range:** [12/2012 - ] |
| **Title:** HEATING / AIR CONDITIONING: AIR CONDITIONING SYSTEM: COOLER CONDENSER; 2013 MY RAV4 [12/2012 - ] | | |

# COOLER CONDENSER

## 1. CONSTRUCTION

(a) On models with air conditioning system, sub-cool condenser is used. This is a multi-flow condenser consisting of 3 portions: a condensing portion, a super-cooling portion and a gas-liquid separator (modulator) all integrated together. This cooler condenser assembly uses a sub-cool cycle for its cooling cycle system to improve heat-exchanging efficiency.

(b) In the sub-cool cycle, after the refrigerant passes through the condensing portion of the cooler condenser assembly, both the liquid refrigerant and the gaseous refrigerant that could not be liquefied are cooled again in the super-cooling portion. Thus, the refrigerant is sent to the No. 1 cooler evaporator sub-assembly in an almost completely liquefied state.

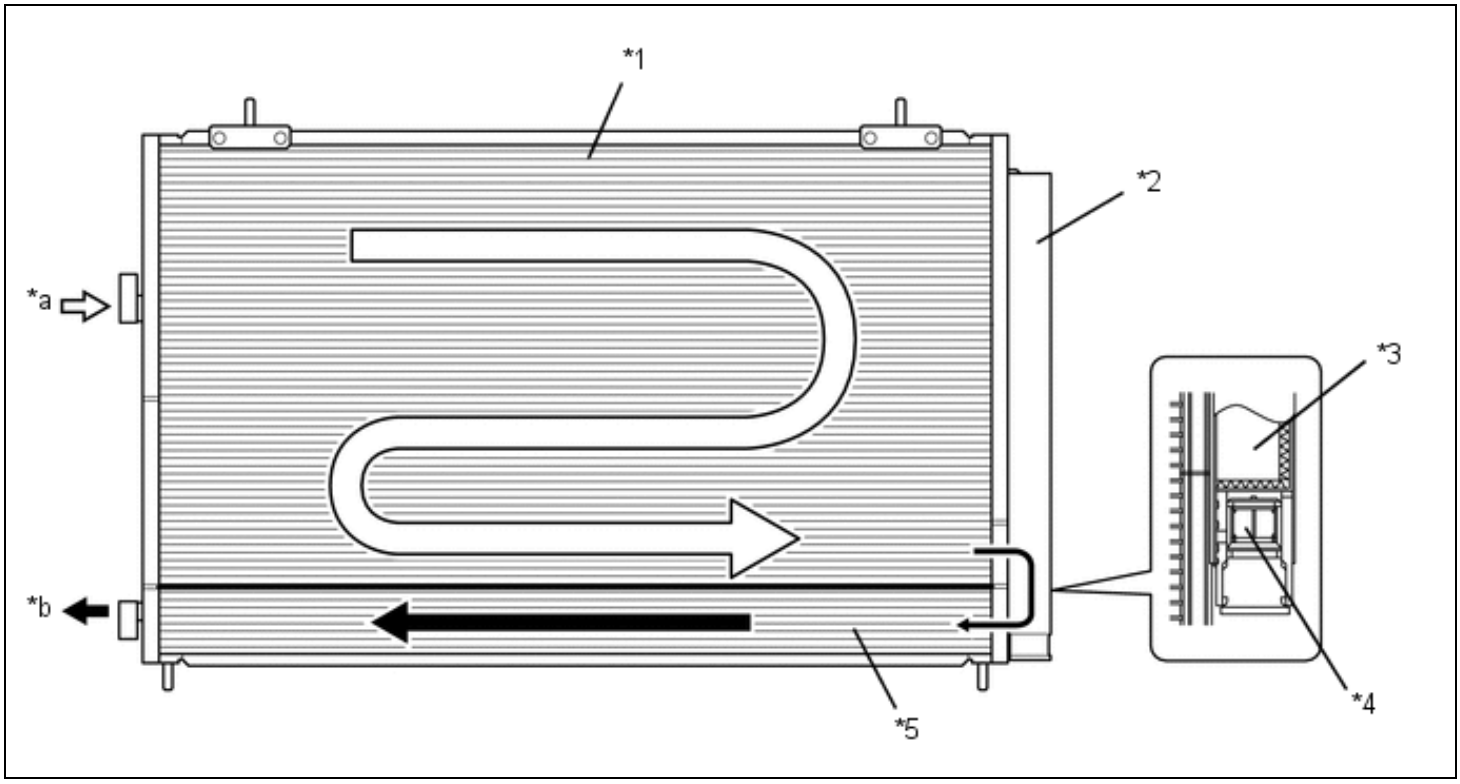


| | | | |
|---|---|---|---|
| *1 | Condensing Portion | *2 | Modulator |
| *3 | Desiccant | *4 | Filter |
| *5 | Super-cooling Portion | - | - |
| *a | Gaseous Refrigerant | *b | Liquid Refrigerant |

**HINT:**

The point at which the air bubbles disappear in the refrigerant of the sub-cool cycle is lower than the proper amount of refrigerant with which the system must be filled. Therefore, if the system is recharged with refrigerant based on the point at which the air bubbles disappear, the amount of refrigerant would be insufficient. As a result, the cooling performance of the system will be affected. If the system is overcharged with refrigerant, this will also lead to reduced performance. For the proper method of verifying the amount of the refrigerant and to recharge the system with refrigerant, refer to the Repair Manual.

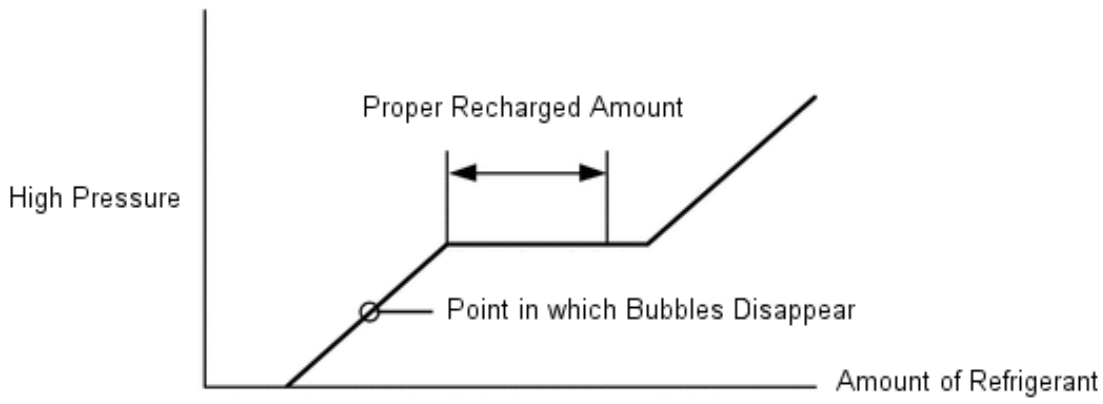
Proper Recharged Amount
High Pressure
Point in which Bubbles Disappear
Amount of Refrigerant