| | | |
|---|---|---|
| **Last Modified:** 03-12-2013 | 6.4 F | **Doc ID:** NM1000000005G12 |
| **Model Year:** 2013 | **Model:** RAV4 | **Prod Date Range:** [12/2012 - ] |
| **Title:** WINDOW / GLASS: POWER WINDOW CONTROL SYSTEM: POWER WINDOW CONTROL; 2013 MY RAV4 [12/2012 - ] | | |

# POWER WINDOW CONTROL

## 1. SYSTEM CONTROL

(a) The power window control system has the following functions:

| FUNCTION | OUTLINE |
|---|---|
| Manual Up-and-down | This function causes the window to open or close while the power window regulator master switch assembly or power window regulator switch assembly is being pulled halfway up or pushed halfway down. The window stops as soon as the switch is released. |
| One-touch Auto Up-and-down(Driver Door)*1 | The one-touch auto up-and-down function enables the window to be fully opened or closed by firmly operating the power window regulator master switch assembly. |
| One-touch Auto Down (Driver Door)*2 | The one-touch auto down function enables the window to be fully opened by firmly operating the power window regulator master switch assembly. |
| Jam Protection (Driver Door)*1 | The jam protection function automatically stops the power window and moves it downward if a foreign object gets jammed in the window during one-touch auto-up operation or manual up operation. |
| Remote Control | The up-and-down operations of the front passenger door window and the rear door windows can be controlled by operating the power window regurator master switch assembly. |
| Window Lock | Operation of the 3 passenger windows is disabled when the window lock switch is pressed. |
| Key Off Operation | • This function makes it possible to operate the power windows for approx. 43 seconds after the ignition switch is turned to ACC or off, when the front doors are not opened.<br>• When the window lock switch is off, the windows can be operated using any of the power window regulator switch assemblies. When the window lock switch is on, only the power window regurator master switch assembly can be used to operate the windows. |

*1: Models with one-touch auto up-and-down function
*2: Models with one-touch auto down function

(1) The ECU built into driver power window motor stores the initial position of its door window. The initial position is not cleared even if battery terminals, fuses or the power window motor connector is disconnected. However, after removing or reinstalling window components, or replacing the power window regulator sub-assembly or power window regulator motor, the stored initial position data must be cleared and initialization must be performed. For details, refer to the Repair Manual.

(b) Jam Protection Function (Driver Door)

(1) The jam protection function automatically stops the power window and moves it downward if a foreign

object gets jammed in the door window during one-touch auto up operation or manual up operation.

(2) The operation of the jam protection function is described below:

| DOOR WINDOW POSITION FROM FULLY CLOSED | OPERATION |
|---|---|
| 200 mm (7.87 in.) or more | Down operation of 125 mm (4.92 in.) or 2.5 seconds |
| 200 mm (7.87 in.) or less | Down operation until door window downward movement of 200 mm (7.87 in.) is reached, or until 5 seconds have elapsed |

(3) The magnet and Hall IC in the power window regulator motor assembly are used to enable power window jam protection.

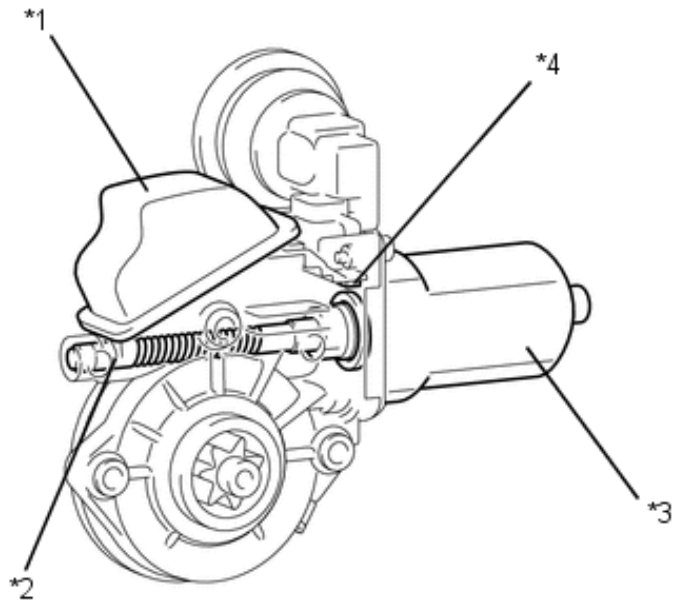


| | | | |
|---|---|---|---|
| *1 | Power Window ECU | *2 | Worm Gear |
| *3 | Motor | *4 | Hall IC |

(4) The Hall ICs convert the changes in the magnetic flux that occur through the rotation of the magnet into pulse signals and output them to the power window ECU built into the power window regulator motor assembly.

(5) To control the jam protection function, the power window ECU determines the amount of movement and jamming of the window glass based on the pulse signals from the Hall IC1, and judges the direction of the window glass movement based on the phase difference between the pulses from the Hall IC1 and Hall IC2.

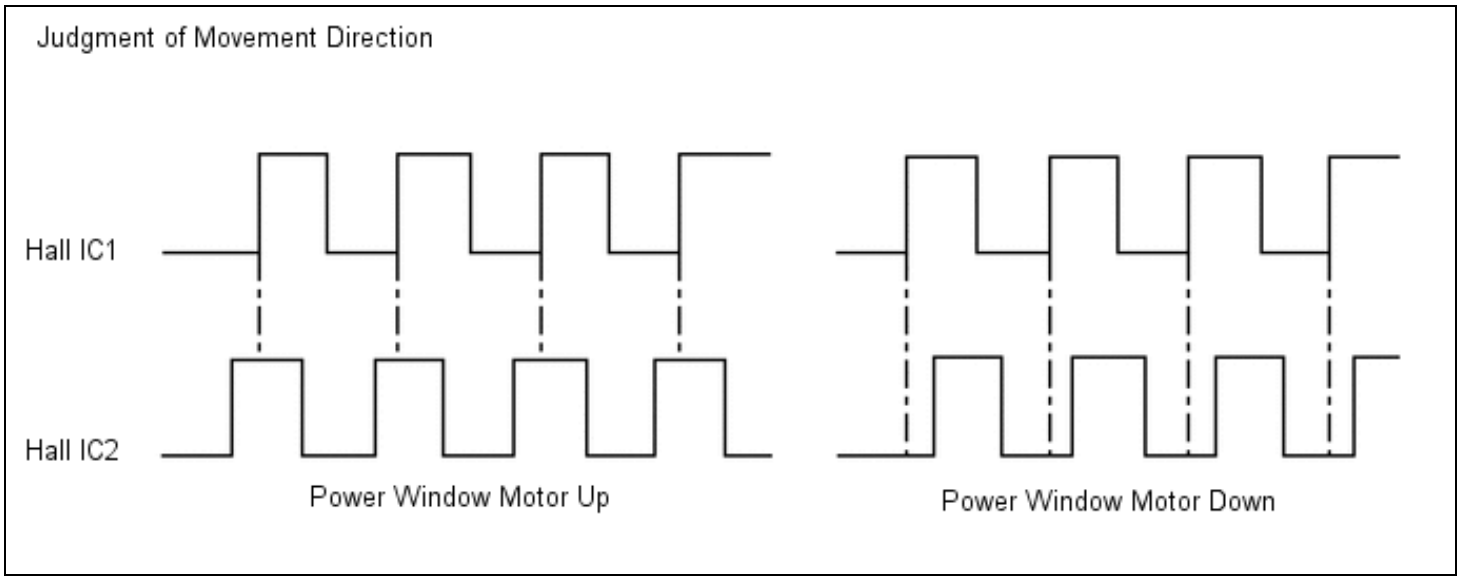


**2. FAIL-SAFE**

(a) If a Hall IC in the power window motor malfunctions, some power window functions will be prohibited in the fail-safe mode:

(1) Each power window operates when the corresponding power window switch is fully pushed down or pulled up and held in that position.

(2) When driver power window ECU detects an abnormality in a Hall IC, which detects the position, speed and direction of the window, it switches to fail-safe mode.