| | | |
|---|---|---|
| **Last Modified:** 03-12-2013 | 6.4 F | **Doc ID:** NM1000000004HDD |
| **Model Year:** 2013 | **Model:** RAV4 | **Prod Date Range:** [12/2012 - ] |
| **Title:** 2AR-FE EMISSION CONTROL: EMISSION CONTROL SYSTEM: CANISTER PUMP MODULE; 2013 MY RAV4 [12/2012 - ] | | |

# CANISTER PUMP MODULE

## 1. CONSTRUCTION

(a) The canister pump module consists of a vent valve, reference orifice, canister pressure sensor, leak detection pump and pump motor.

(b) The vent valve switches the passages in accordance with the signals received from the ECM.

(c) A DC type brushless motor is used for the pump motor.

(d) A vane type leak detection pump is used.

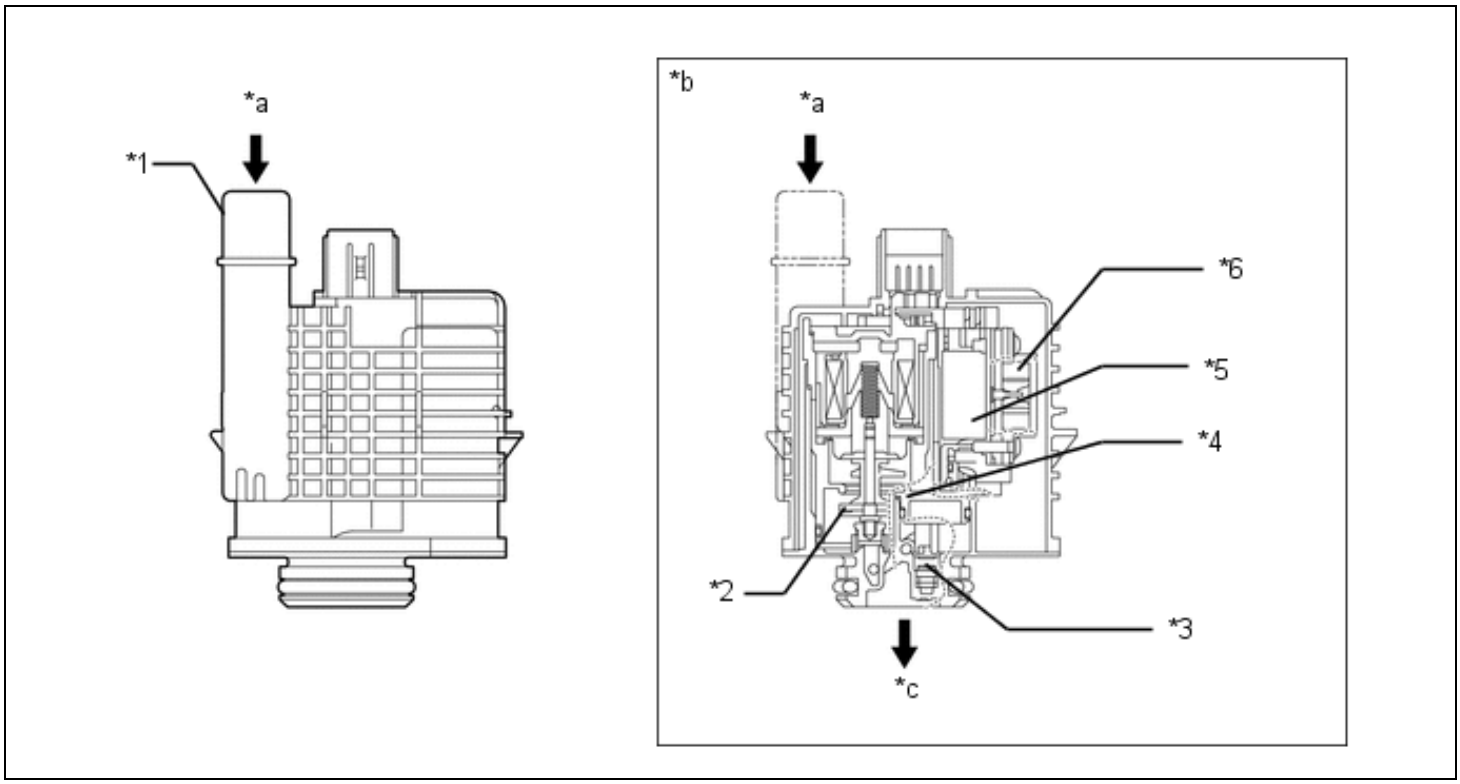


| | | | |
|---|---|---|---|
| *1 | Canister Pump Module | *2 | Vent Valve |
| *3 | Reference Orifice | *4 | Canister Pressure Sensor |
| *5 | Pump Motor | *6 | Leak Detection Pump |
| *a | Fresh Air | *b | Cross Sectiom |
| *c | To Charcoal Canister Assembly | - | - |

### Simplified Diagram

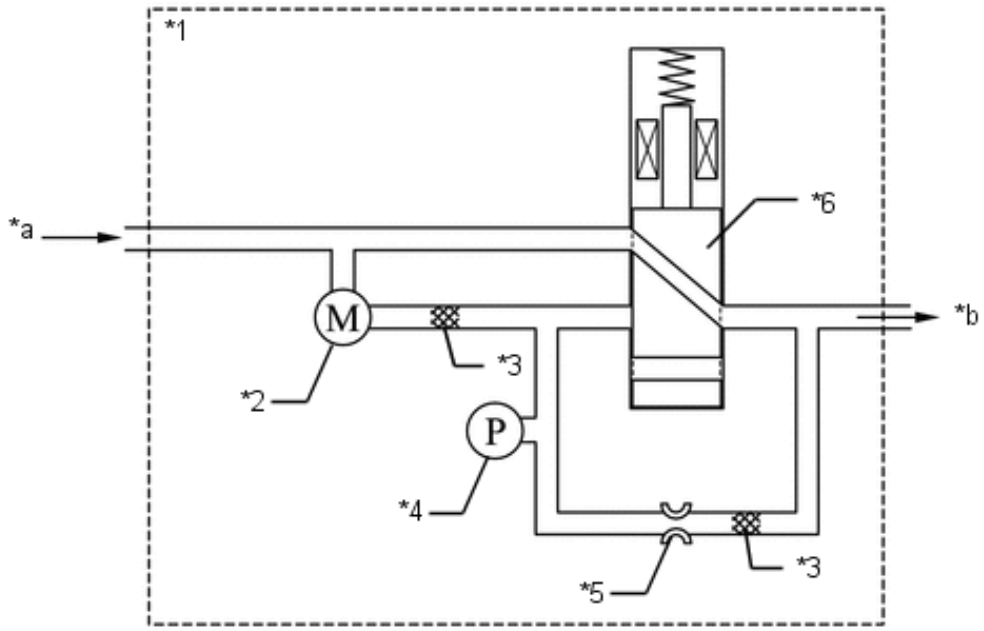


| | | | |
|---|---|---|---|
| *1 | Canister Pump Module | *2 | Leak Detection Pump and Pump Motor |
| *3 | Fliter | *4 | Canister Pressure Sensor |
| *5 | Reference Orifice [0.5 mm (0.02 in.) Diameter] | *6 | Vent Valve |
| *a | Fresh Air | *b | To Charcoal Canister Assembly |