| | | |
|---|---|---|
| **Last Modified:** 03-12-2013 | 6.4 F | **Doc ID:** NM1000000005G18 |
| **Model Year:** 2013 | **Model:** RAV4 | **Prod Date Range:** [12/2012 - ] |
| **Title:** WIPER / WASHER: WIPER AND WASHER SYSTEM: PARTS LOCATION; 2013 MY RAV4 [12/2012 - ] | | |

# PARTS LOCATION

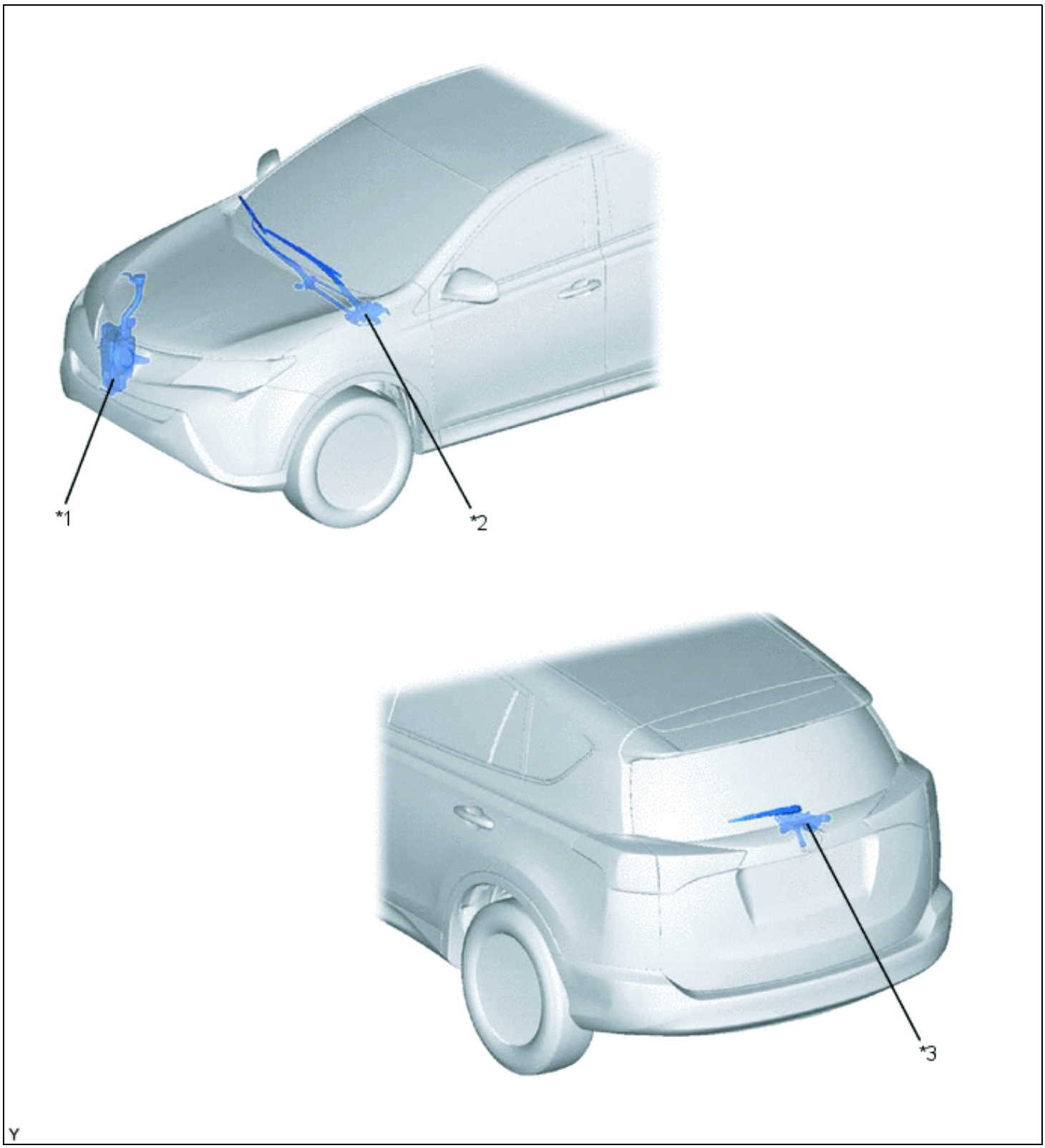


| | | | |
|---|---|---|---|
| | Windshield Washer Jar Assembly | | |

| | | | |
|---|---|---|---|
| *1 | • Windshield Washer Motor and Pump Assembly | *2 | Front Wiper Motor and Link Assembly |
| *3 | Rear Wiper Motor Assembly | - | - |

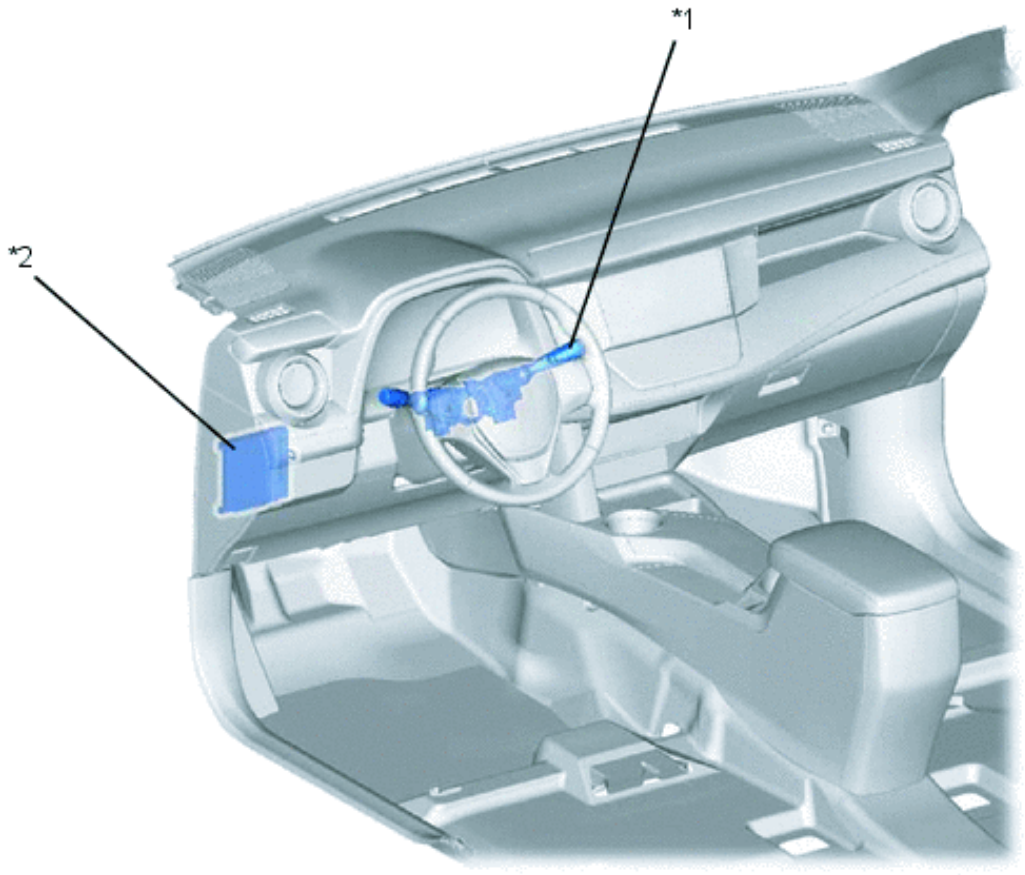


Y

| | | | |
|---|---|---|---|
| *1 | Windshield Wiper Switch Assembly | *2 | Main Body ECU (Multiplex Network Body ECU) |